数码管显示当前电压值，包含四种状态：蓄电池充满状态、蓄电池不满状态、预充状态、恒流充电状态。按键指令切换充满断电和光伏充电。

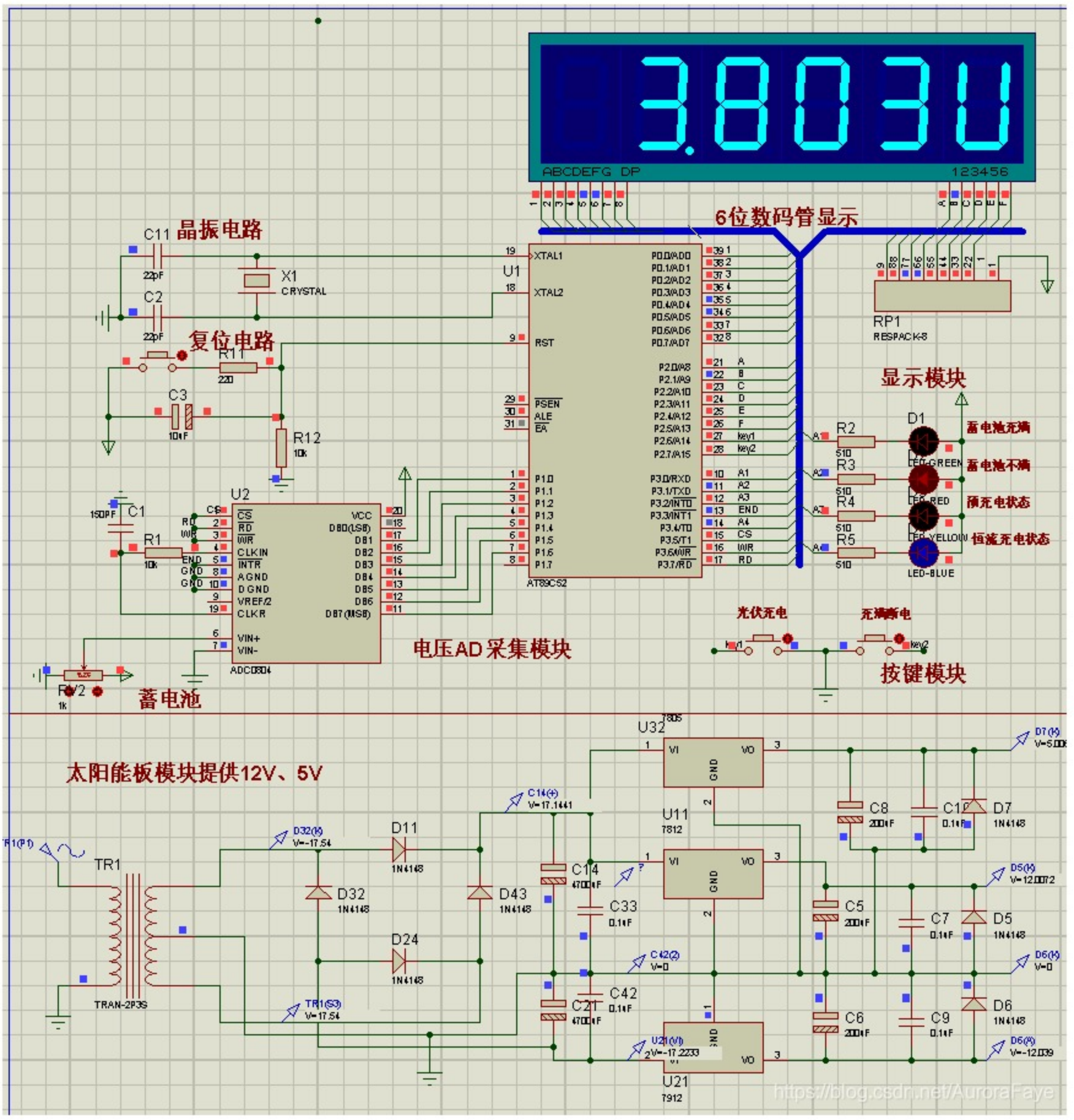

复制

```c
#include <reg51.h>
#include <intrins.h>

#include "get_status.h"
#define uchar   unsigned char
#define uint    unsigned int
sbit    full_led    = P3 ^ 0; //充满电
sbit    poor_led    = P3 ^ 1; //电量不足
sbit    yuchong     = P3 ^ 2; //预充电状态
sbit    henliu      = P3 ^ 4; //恒流充电
sbit    key1        = P2 ^ 6; //充电
sbit    key2        = P2 ^ 7; //断电

bit flag        = 1;
void main()
{
    while ( 1 )
    {
        Data_ADC = ADC0804();
        /* 启动ADC转换 */
        Data_Conv();
        /* AD采样后数据转换 */
        if ( flag == 1 )
        {
            if ( Data_Led[0] >= 4 )
            {
```