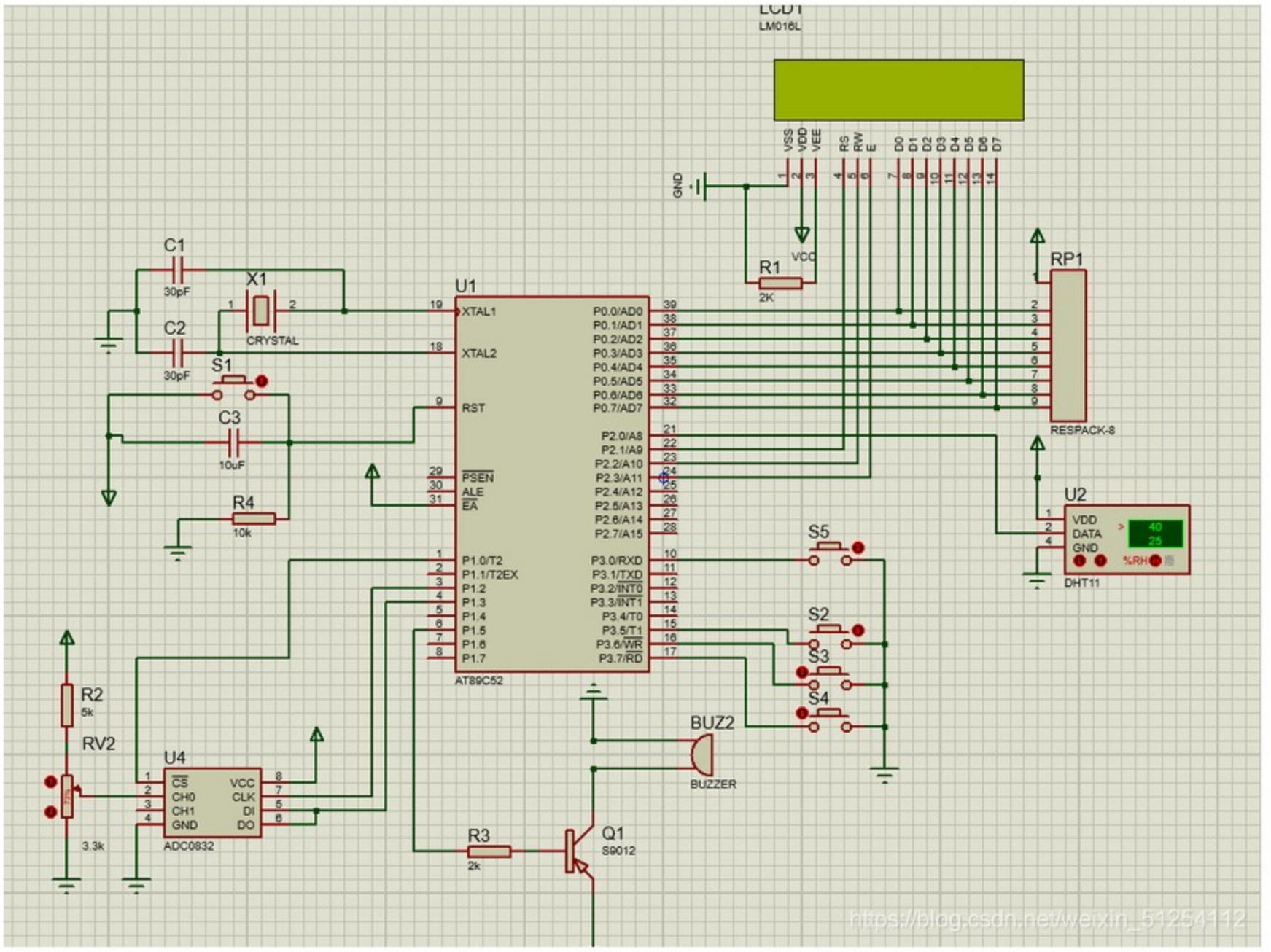


```c
sbit beep = P1^6;           //蜂鸣器IO口定义

//sbit mq2 = P1^0;            //烟雾传感器IO口定义
//uchar yushe_yanwu=45;       //烟雾预设值
uchar yanwu;                //用于读取ADC数据


/****************蜂鸣器报警函数***************/
void clock_h()
{
    if((WZ>t_high)||(WZ<t_low)||(HZ>s_high)||(HZ<s_low)||(yanwu>y_high)||(yanwu<y_low))
    {
        beep = ~beep;       //蜂鸣器报警
    }
    else
    {
        beep = 1;
    }
}

/******************主程序**********************/
void main()
{
    u8 i=0,j=0;
    P0 = P1 = P2 = P3 = 0xff;
    init_1602();            //lcd1602初始化
    while(1)
    {
        keyscan();          //调用键盘扫描子函数
        if(sz==0)
        {
            clock_h();      //蜂鸣器报警函数
            if(flag==0)
```