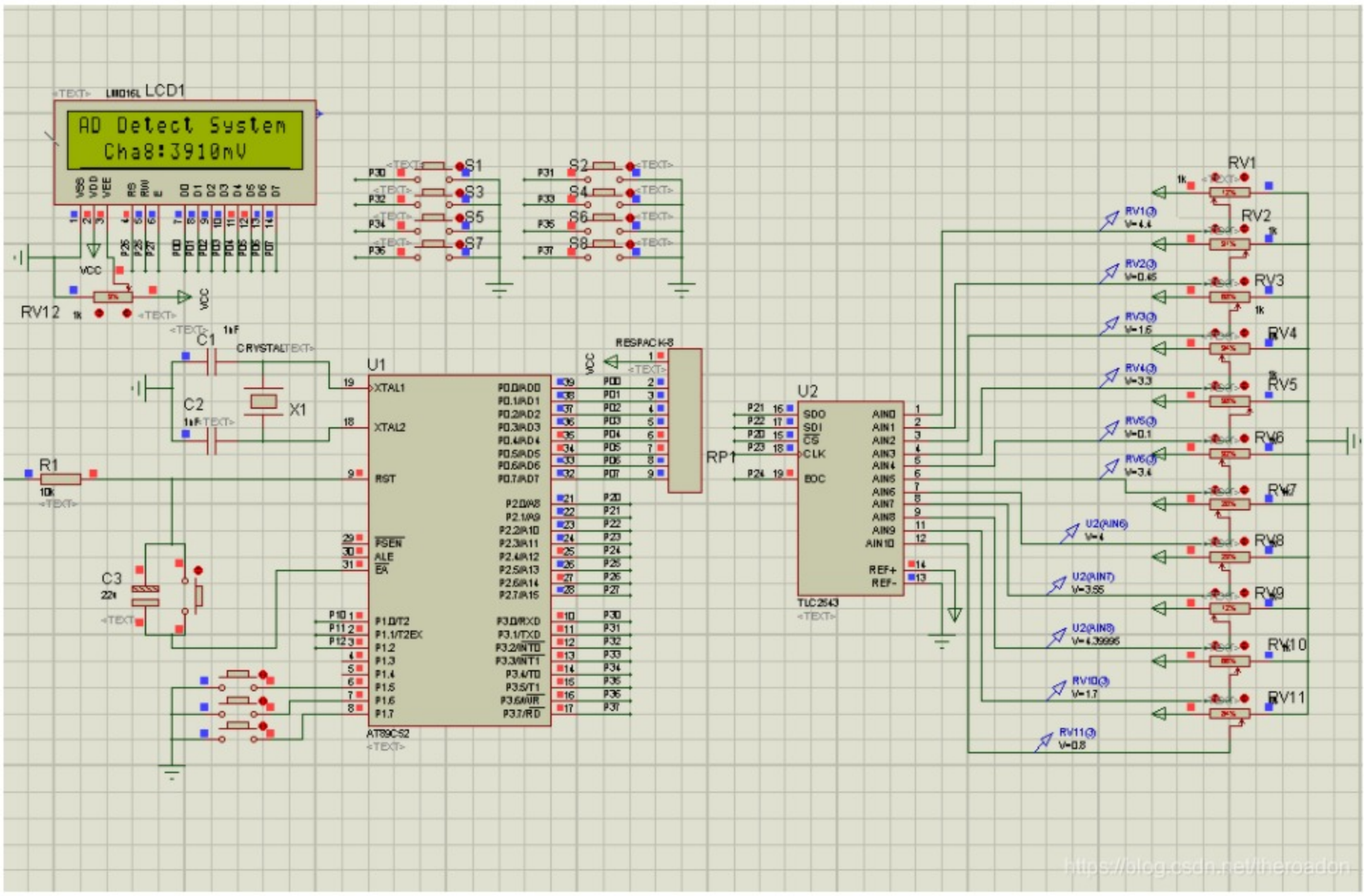

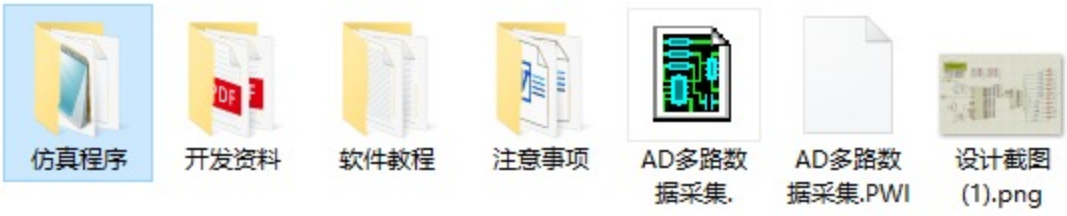
```
#include<reg52.h>
#include<intrins.h>
#define uchar unsigned char
#define uint unsigned int
/*下面是引脚连接关系*/
sbit AD_EOC   =P2^4;   /*转换完成指示*/
sbit AD_IOCLK =P2^3;         /*时 钟*/
sbit AD_DATIN =P2^2;   /*数据入*/
sbit AD_DATOUT=P2^1;   /*数据出*/
sbit AD_CS    =P2^0;   /*片  选*/
uint ad_result;    /*存各模拟通道的数据*/
sbit E=P2^7;
sbit rs=P2^6;
sbit rw=P2^5;
sbit S1=P3^0;
sbit S2=P3^1;
sbit S3=P3^2;
sbit S4=P3^3;
sbit S5=P3^4;
sbit S6=P3^5;
sbit S7=P3^6;
sbit S8=P3^7;
sbit S9=P1^5;
sbit S10=P1^6;
sbit S11=P1^7;
sbit S12=P1^0;
uchar code zengzhen[]={"AD Detect System"};
uchar code zengzhen1[]={"Cha :    mV "};
uint zengzhen2[8];
uint i,j;
uchar sum;
void delay(uint z)
```