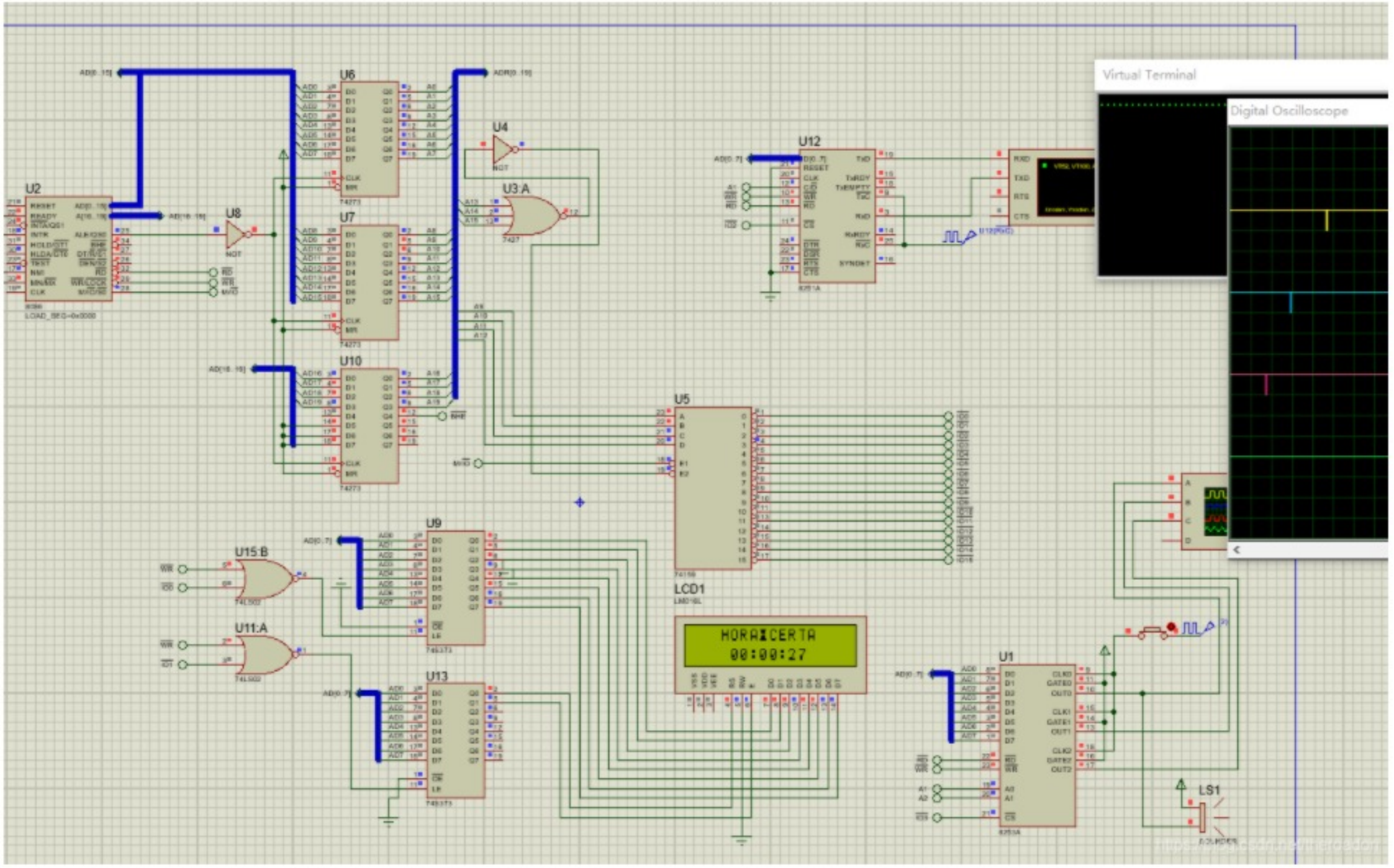
Virtual Terminal
Digital Oscilloscope
U2
U6
U7
U10
U4
U3:A
U8
U12
U5
LCD1
U9
U13
U15:B
U11:A
U1
LS1
HORA:CERTA
00:00:27

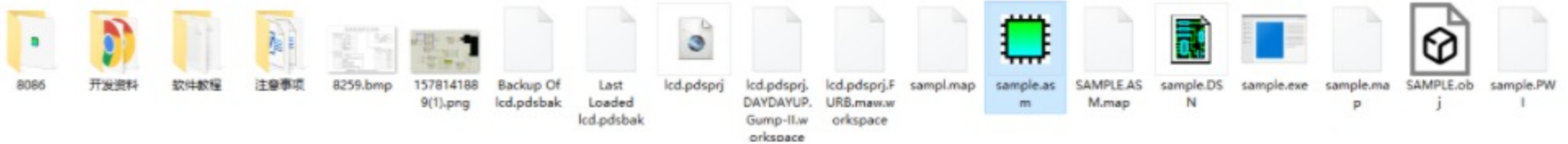
8086
开发资料
软件教程
注意事项
8259.bmp
1578141889(1).png
Backup Of lcd.pdsbak
Last Loaded lcd.pdsbak
lcd.pdsprj
lcd.pdsprj.DAYDAYUP.Gump-II.workspace
lcd.pdsprj.FURB.maw.workspace
sampl.map
sample.asm
SAMPLE.ASM.map
sample.DSN
sample.exe
sample.map
SAMPLE.obj
sample.PWI