file edit bookmarks assembler emulator math ascii codes help

new open examples save compile emulate calculator convertor options help about

```
DATA    SEGMENT
;输入口地址
IN245     EQU    8000H
;输出口地址
OUT373    EQU    0A000H
;8种方式，8*8=64个码值
state   DB 0FEH, 0FCH, 0F8H, 0F0H, 0E0H, 0C0H, 80H,  00H
        DB 00H,  80H,  0C0H, 0E0H, 0F0H, 0F8H, 0FCH, 0FEH
        DB 0FEH, 0FDH, 0FBH, 0F7H, 0EFH, 0DFH, 0BFH,  7FH
        DB  7FH, 0BFH, 0DFH, 0EFH, 0F7H, 0FBH, 0FDH, 0FEH
        DB 0FDH, 0F7H, 0DFH,  7FH, 0FDH, 0F7H, 0DFH,  7FH
        DB 0FEH, 0FBH, 0EFH, 0BFH, 0FEH, 0FBH, 0EFH, 0BFH
        DB 0BFH, 0EFH, 0FBH, 0FEH, 0BFH, 0EFH, 0FBH, 0FEH
        DB 55H, 0AAH,  55H,  0AAH, 55H,  0AAH,  55H, 0AAH
DATA    ENDS

CODE     SEGMENT ;
         ASSUME CS:CODE, DS:DATA
START:   MOV    AX, DATA
         MOV    DS, AX
         NOP
START1:  NOP
         NOP
         LEA    SI, state

         MOV    AX,0
         MOV    DX,IN245    ;读取开关的状态
         IN     AL,DX
NEXT:    AND AX,07H   ;只取最低三位，因为开关只连接0-2
         MOV BL,08H
         MUL BL       ;AL*8得到偏移地址
         ADD SI,AX
         MOV CX,08H
Blink:
         MOV    AL,[SI]
         MOV    DX,OUT373
         OUT    DX,AL
```

https://blog.csdn.net/theroadon

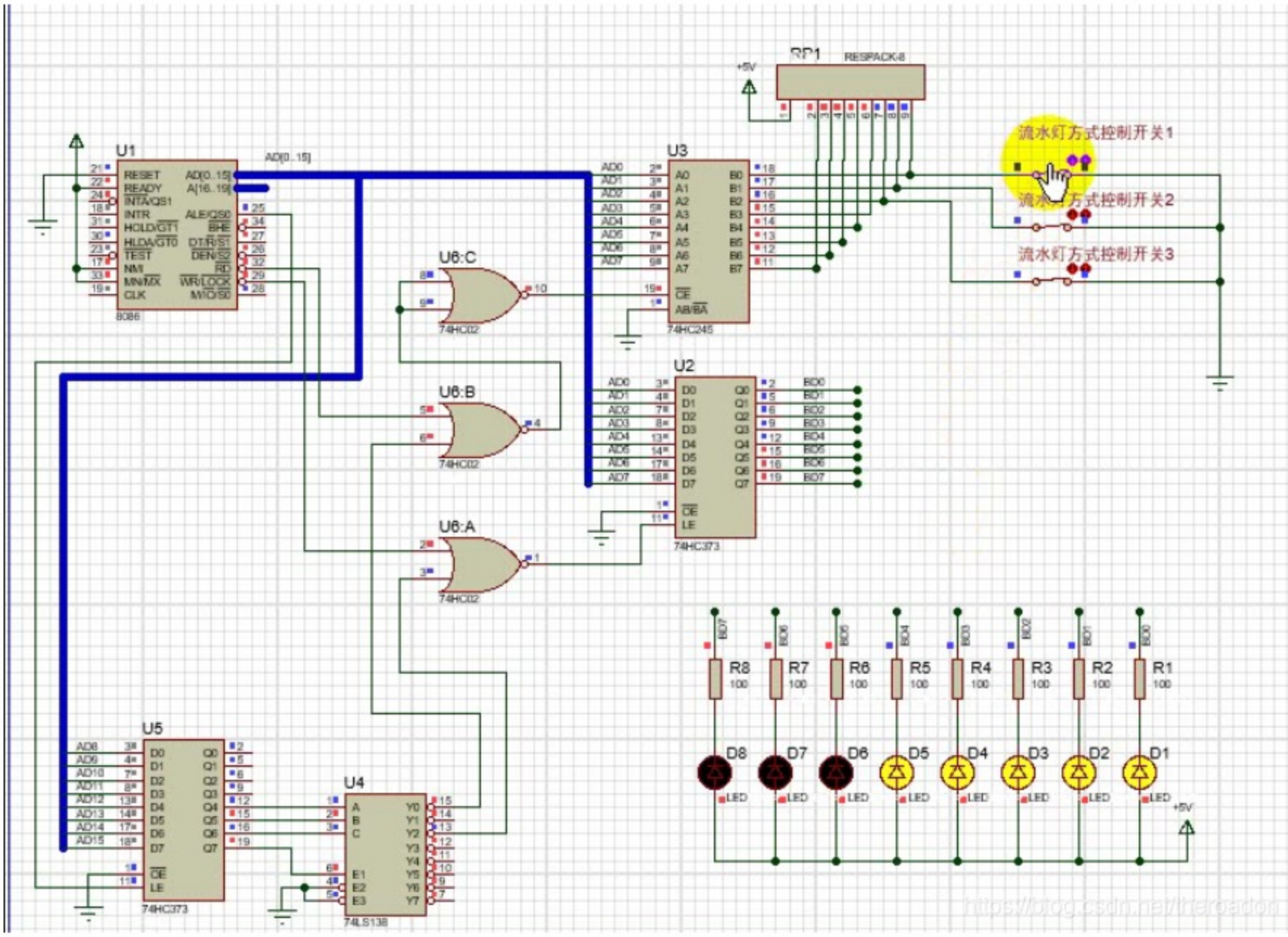

https://blog.csdn.net/theroadon