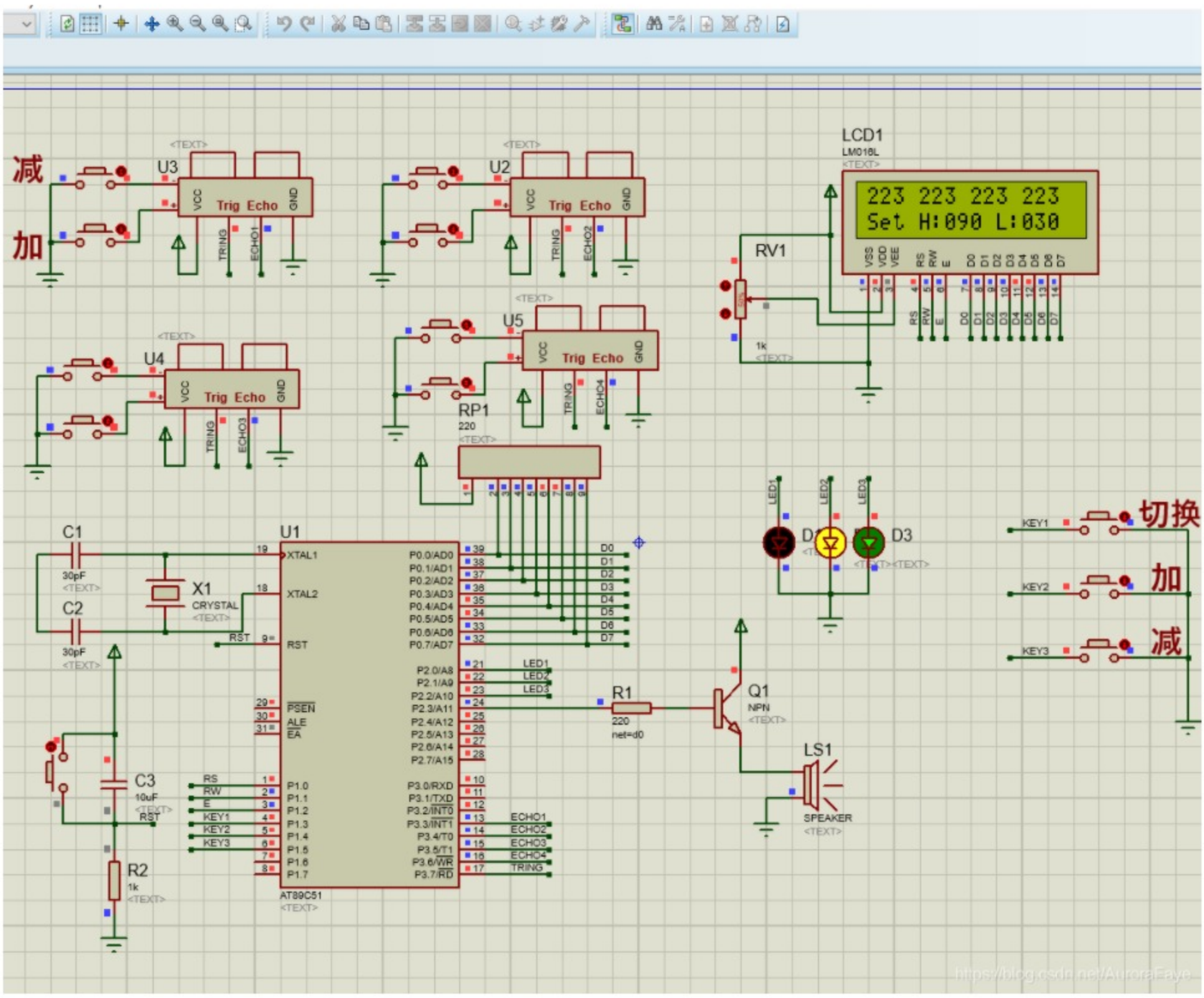

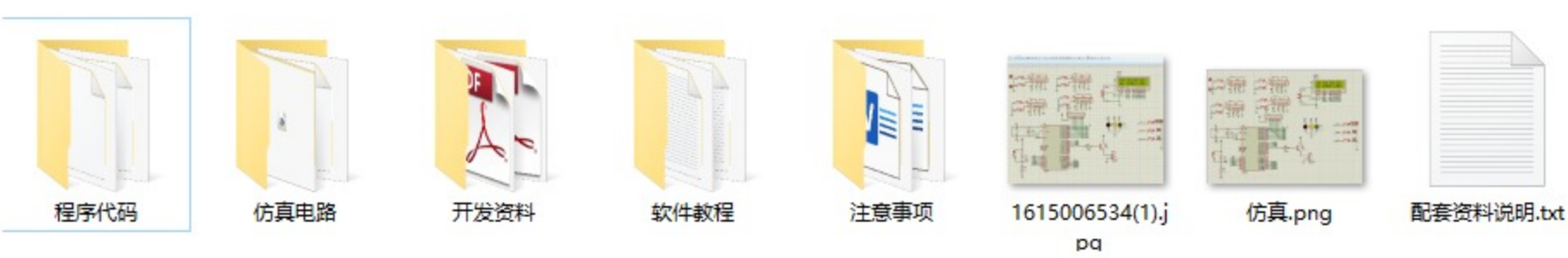
```c
#include "LCD1602DRV.h"
#include "STCEEPROM.h"
sbit  RX1 = P3^3;
sbit  RX2 = P3^4;
sbit  RX3 = P3^5;
sbit  RX4 = P3^6;
sbit  TX = P3^7;

sbit LED3 = P2^2;
sbit LED2 = P2^1;
sbit LED1 = P2^0;
sbit SPEAK = P2^3;

sbit KEY1 = P1^3;
sbit KEY2 = P1^4;
sbit KEY3 = P1^5;

uint  time=0;
uint  timer=0;
uint S=0,S1=0,S2=0,S3=0,S4=0;

bit flag =0;
uchar KEY_flag=0;
//延时函数
void Conut(void)
{
     time=TH0*256+TL0;
     TH0=0;
     TL0=0;

     S=(time*1.87)/100;     //算出来是CM
     if((S>=700)||flag==1) //超出测量范围显示“-”
     {
      flag=0;
     }
}
void main(void)
{
    uint SET_H=90,SET_L=30;
  LCD1602_Init();//液晶初始化
  SetRowCol(0,0);
    printf("000 000 000 000");
    SetRowCol(1,0);
```