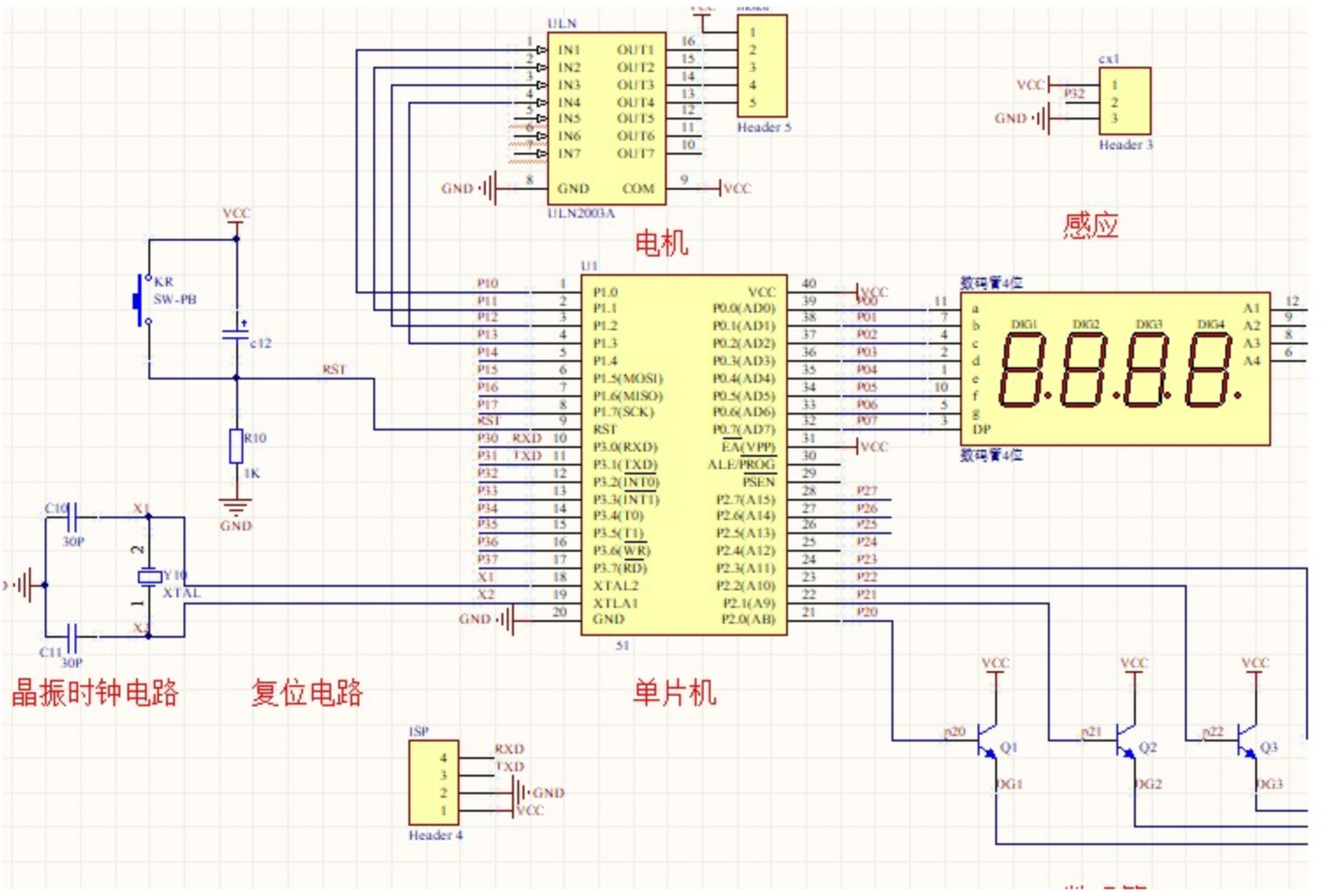

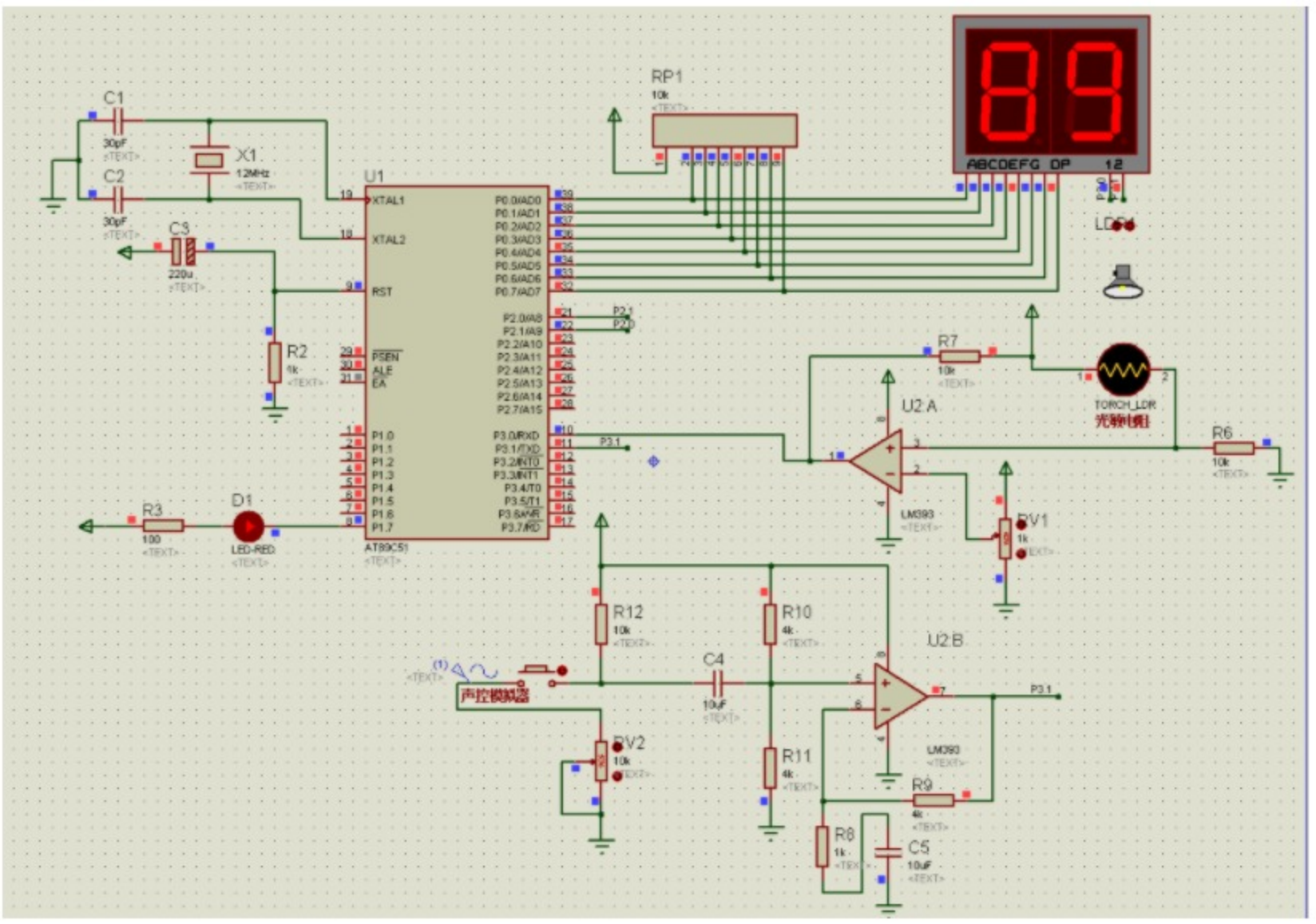
```
#include <reg52.h>
#include <intrins.h>
#define uchar  unsigned char
#define uint   unsigned int
#define ulong  unsigned long
//共阳极数码管段码
uchar code SEG7[]={/*0,1,2,3,4,5,6,7,8,9,*/
0xC0,0xF9,0xA4,0xB0,0x99,0x92,0x82,0xF8,0x80,0x90,};
//数码管显示缓冲
uchar num[8];
//数码管位码端口
sbit      q2=P2^0;
sbit      q1=P2^1;
//延时函数ms
void _delay_ms(uint t)
{
   uint i,j;
   for(i=0;i<t;i++)
     for(j=0;j<120;j++);
}
//延时函数us
void _delay_us(uchar t)
```