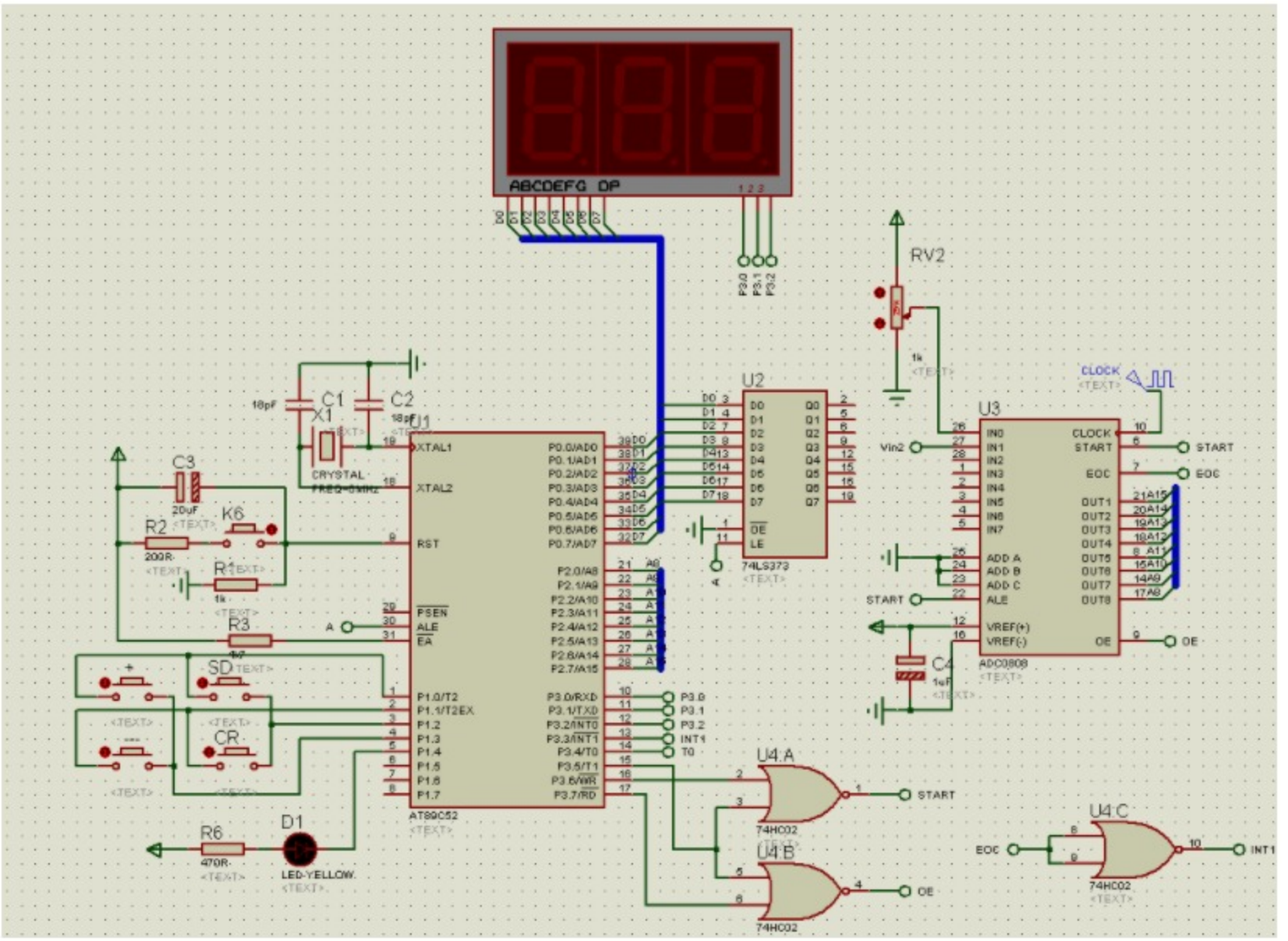


```c
#include <AT89X51.H>
#include<stdio.h>
#include <math.h>
#include <string.h>
#define uchar   unsigned char
#define uint    unsigned int
void DelayMs(unsigned int cnt);     //延时"cnt毫秒"
void DelayUs(unsigned char dcnt);   //延时"dcnt微秒"
uchar table[]={0xc0,0xf9,0xa4,0xb0,0x99,0x92,0x82,0xf8,0x80,0x90};
uchar table1[]={0x40,0x79,0x24,0x30,0x19,0x12,0x02,0x78,0x00,0x10};
bit SD=0;
int temp,temp1,Key;
int out,out0809,ADC0809,SET=250;
//主程序
void main(void)
{
  while(1)
 {
   SCON=0x52;
   TMOD=0x01;
   TH0=0xff;
   TL0=0xff;
   TR0=1;
   ET0=1;
   EA=1;
   IT1=1;
```