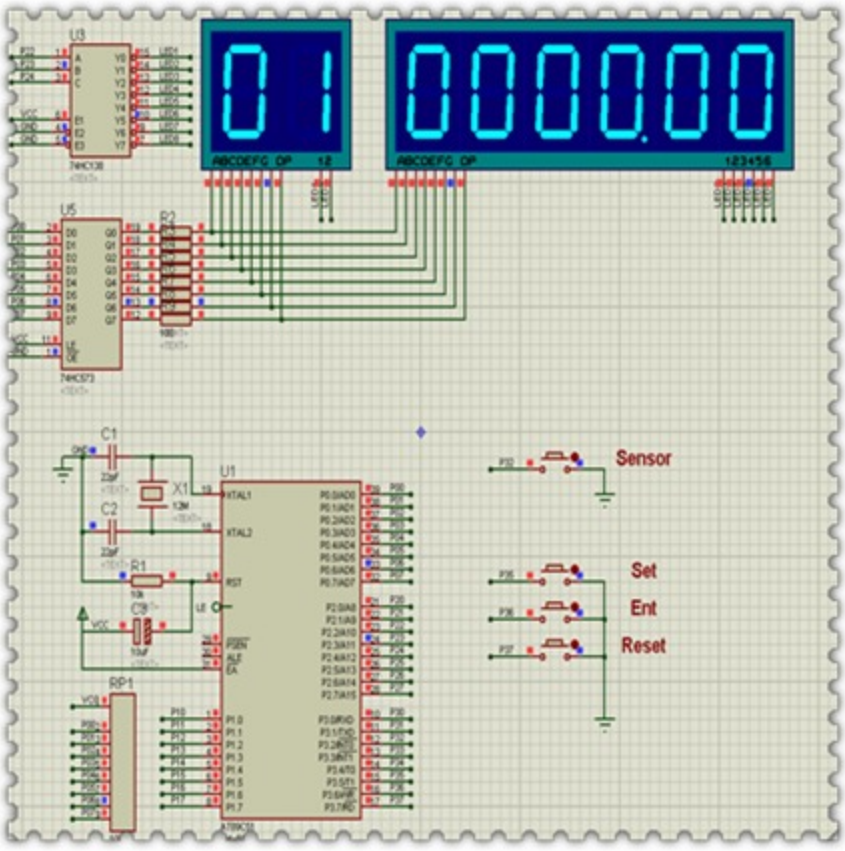


```c
#include<reg51.h>

//---重定义关键词---//
#ifndef uchar
#define uchar unsigned char
#endif

#ifndef uint
#define uint unsigned int
#endif

//--定义使用的IO口--//
#define GPIO_DIG P0

sbit LSA=P2^2;
sbit LSB=P2^3;
sbit LSC=P2^4;

sbit K1=P3^5;    //圈数设置
sbit K2=P3^6;    //圈数确定
sbit K3=P3^7;    //清零

unsigned int Time;
unsigned int sec=0;
unsigned char countset=1;
char count;

//--定义全局变量--//
unsigned char code DIG_PLACE[8] = {
0xfe,0xfd,0xfb,0xf7,0xef,0xdf,0xbf,0x7f};//位选控制   查表的方法控制
unsigned char code DIG_CODE[17] = {
0x3f,0x06,0x5b,0x4f,0x66,0x6d,0x7d,0x07,
0x7f,0x6f,0x77,0x7c,0x39,0x5e,0x79,0x71,0x00};
//0、1、2、3、4、5、6、7、8、9、A、b、C、d、E、F的显示码
unsigned char DisplayData[8];
//用来存放要显示的8位数的值
```