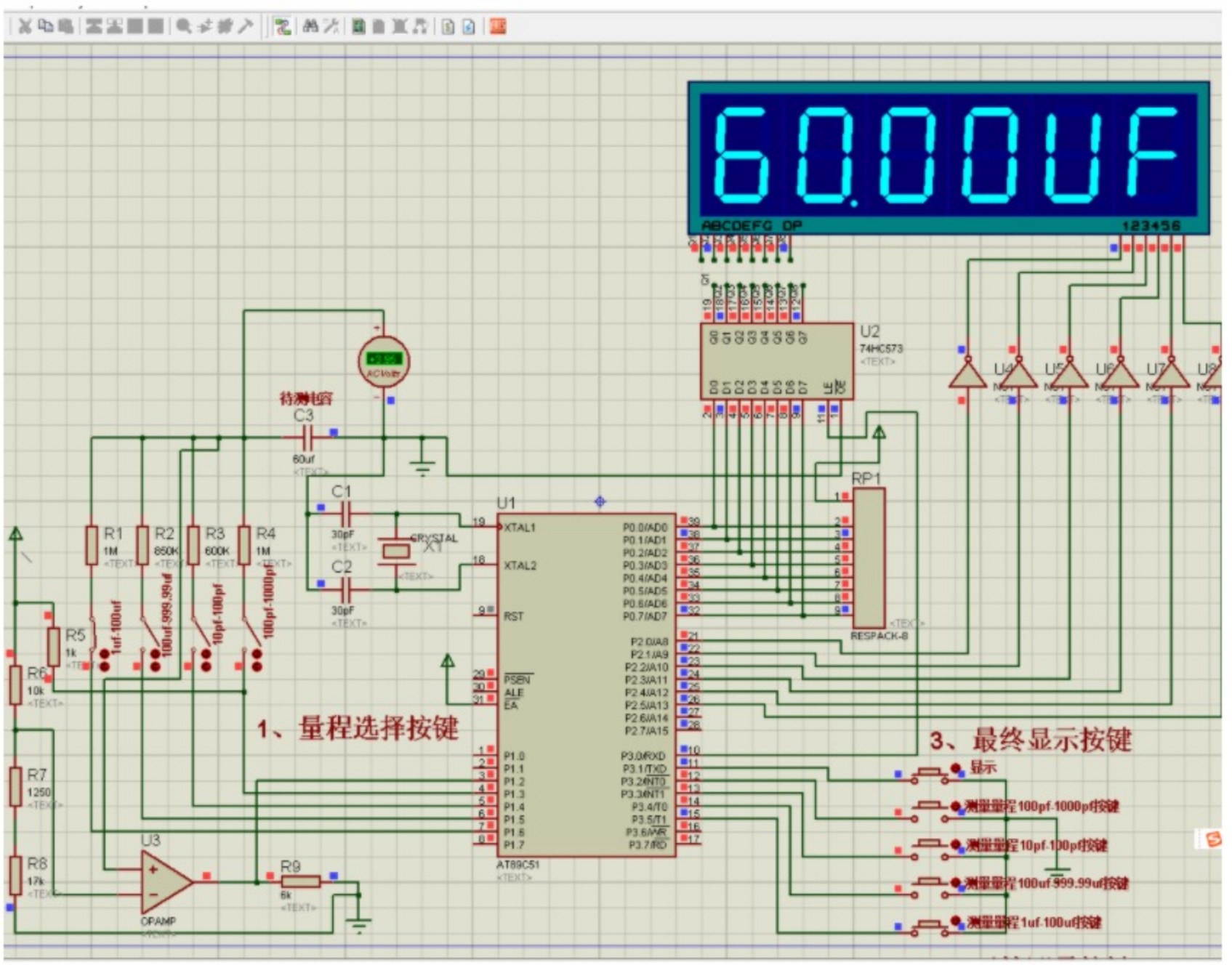

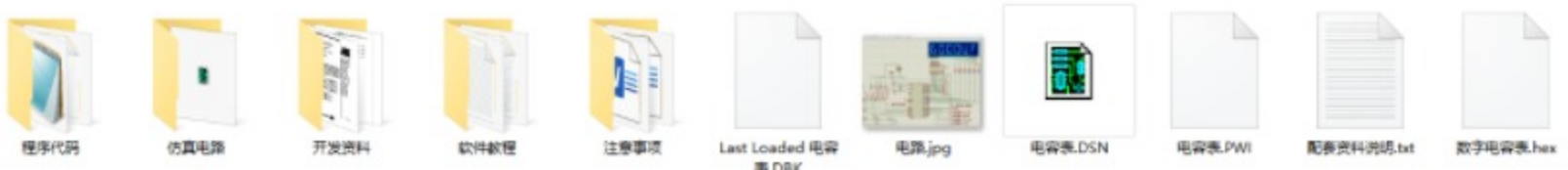
```
#include<reg52.h>
#define DataPort P0 //定义数据端口 程序中遇到DataPort 则用P0 替换
sbit LATCH1=P3^0;//定义锁存使能端口 段锁存
sbit CAP=P1^2;//运放输出连接端，当输出高电平时停止计时
sbit nf=P3^1;//测量控制总按键，低电平有效
sbit lm1=P1^3;
sbit lm2=P1^4;
sbit lm3=P1^5;
sbit lm4=P1^6;
sbit  key1=P3^2;
sbit  key2=P3^3;
sbit  key3=P3^4;
sbit  key4=P3^5;

unsigned int num;
unsigned char code
dofly_DuanMa1[]={0x3f,0x06,0x5b,0x4f,0x66,0x6d,0x7d,0x07,0x7f,0x6f,0x77,0x7c,0x39,0x5e,0x79,0x71};// 显示段码值0~F，不显
unsigned char code
dofly_DuanMa2[]={0xbf,0x86,0xdb,0xcf,0xe6,0xed,0xfd,0x87,0xff,0xef,0xf7,0xfc,0xb9,0xde,0xf9,0xf1};// 显示段码值0~F，显示

dofly_WeiMa[]={0x01,0x02,0x04,0x08,0x10,0x20,0x40,0x80};//分别对应相应的数码管点亮,即位码
unsigned char TempData[8]; //存储显示值的全局变量

void Delay(unsigned int t); //延时函数声明
void delayms(unsigned char t);
void Display(unsigned char FirstBit,unsigned char Num);
void  ke1(void) ;
void  ke2(void) ;
void  ke3(void) ;
void  ke4(void) ;
```