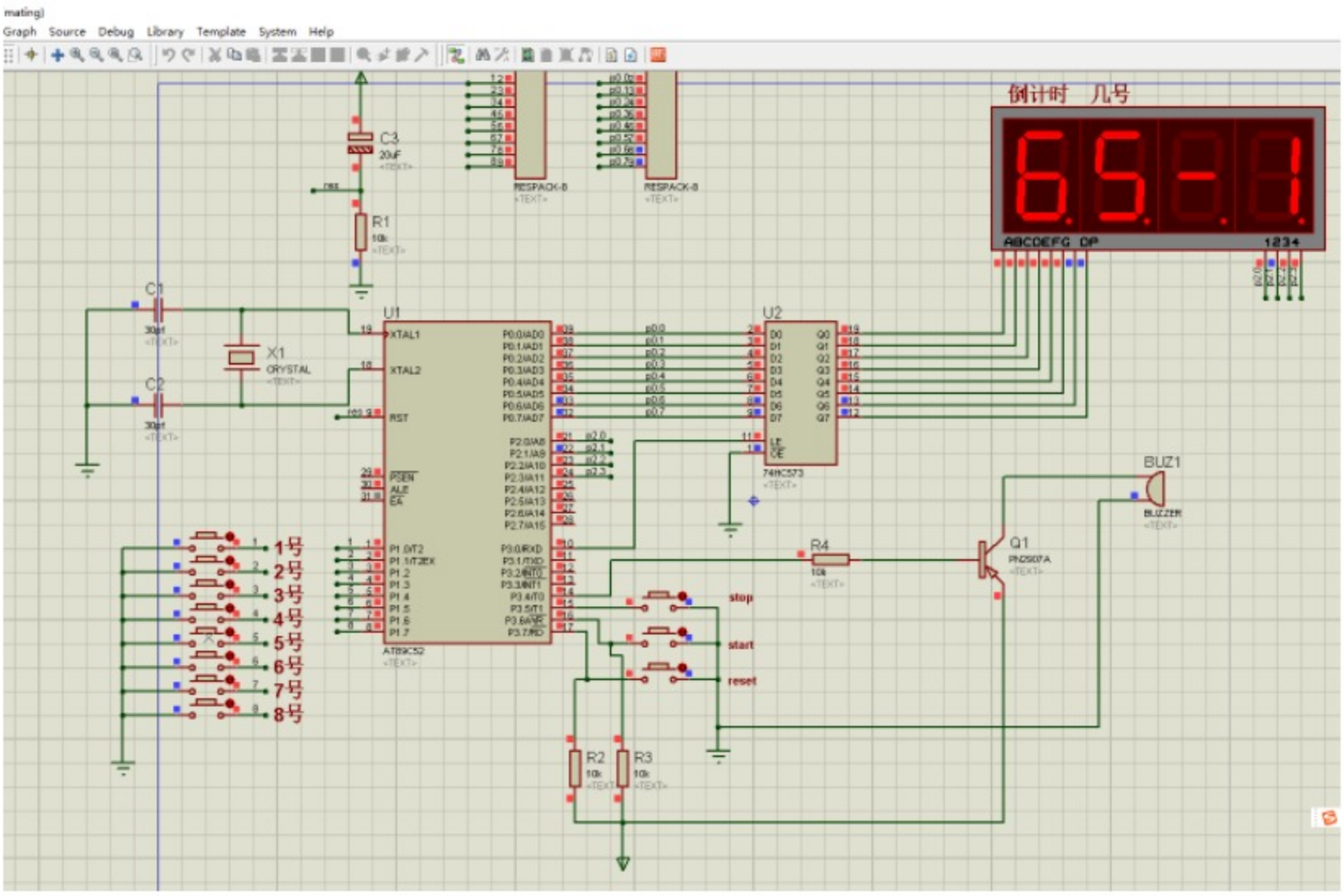


```
#include<reg51.h>

#define uint unsigned int
#define uchar unsigned char

unsigned char code table[]={0x40,0x79,0x24,0x30,0x19,
0x12,0x02,0x78,0x00,0x10,0x08,0x03,0x46,0x21,0x06,0x0e};

sbit start=P3^6;
sbit stop=P3^5;
sbit reset=P3^7;
sbit key1=P1^0;
sbit key2=P1^1;
sbit key3=P1^2;
sbit key4=P1^3;
sbit key5=P1^4;
sbit key6=P1^5;
sbit key7=P1^6;
sbit key8=P1^7;
sbit buzzer=P3^4;

bit start_flag=0;
bit stop_flag=0;
bit key1_flag=0;
bit key2_flag=0;
bit key3_flag=0;
bit key4_flag=0;
bit key5_flag=0;
bit key6_flag=0;
bit key7_flag=0;
bit key8_flag=0;
bit reset_flag=0;
bit action=0;
```

- 8位抢答器程序
- 8位抢答器仿真
- 开发资料
- 软件教程
- 注意事项
- 电路图.jpg
- 配套资料说明.txt