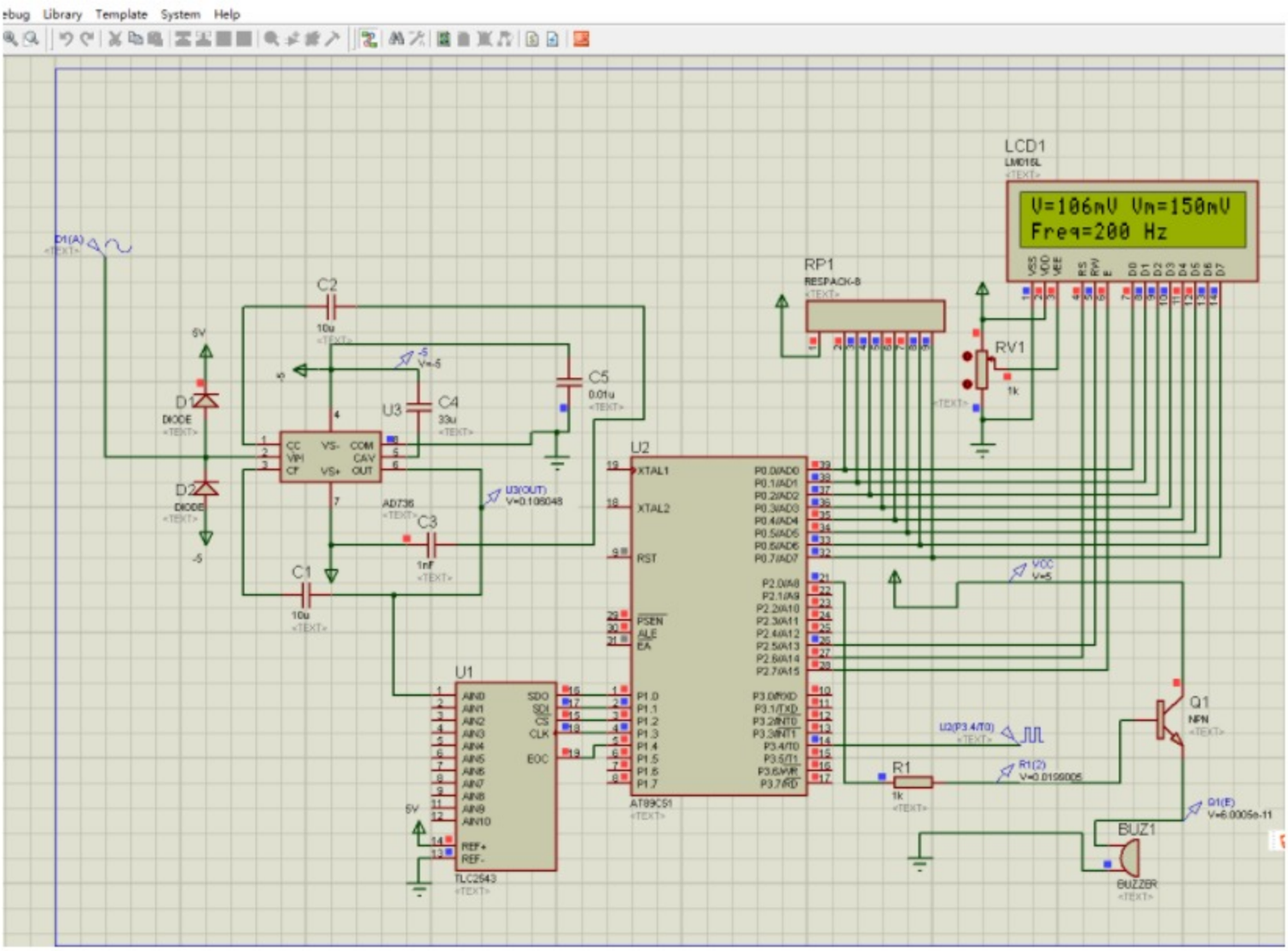


```
#include <reg51.h>
#include "LCD1602.h"
#include "TLC2543.h"
#include "delay.h"
#include <intrins.h>
#include <stdio.h>
unsigned int zyx;
unsigned int ADresult[1];
unsigned int Freq=0;
void Timer_Init();//  定时器声明
unsigned char cnt_t1=0;
sbit fengming=P2^0;
main(void)
{
    unsigned char Vrms[4],Vmax[4],Freq_temp[5];

    LCD1602_Init();
    Timer_Init();
    LCD1602_SendString(1,0,"V=");
    LCD1602_SendString(1,8,"Vm=");
    LCD1602_SendString(2,0,"Freq=");
    LCD1602_SendString(1,5,"mV");
    LCD1602_SendString(1,14,"mV");
    LCD1602_SendString(2,9,"Hz");
```