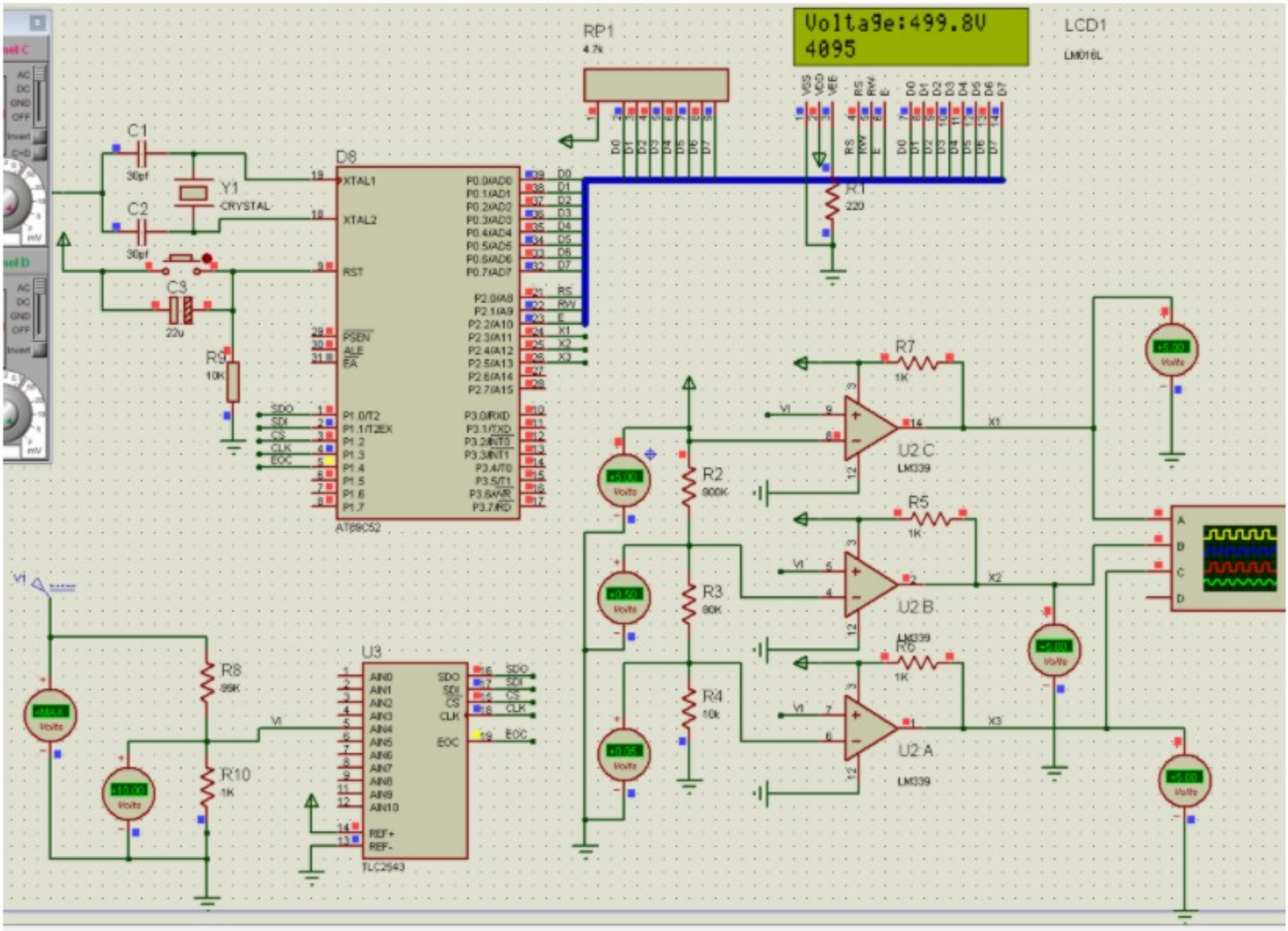

】

```c
#include<reg52.h>
#include<intrins.h>
#define uint unsigned int
#define uchar unsigned char
uint LCD[6];   //电压数据转换成LCD1602液晶字符显示
uint Volt;
//***********TLC549管脚配置*********//
//sbit DO  = P1^0;        //时钟
//sbit CS  = P1^1;        //片选
//sbit CLK = P1^2;        //数据输出
//*******************************//
sbit RS = P2^0;                        //1602液晶数据/命令选择端
sbit RW = P2^1;                        //1602液晶读写端
sbit E  = P2^2;                        //1602液晶使能端
sbit X1 = P2^3;
sbit X2 = P2^4;
sbit X3 = P2^5;
sbit CS=P1^2;        //片选引脚
sbit CLK=P1^3;       //时钟脉冲引脚
sbit SDO=P1^0;       //数据输出引脚
sbit SDI=P1^1;       //数据输入引脚
sbit EOC=P1^4;                 //转换结束引脚
//*********ADC0809管脚配置************//
//sbit ALE = P1^3;        //地址锁存允许信号
//sbit CLK = P1^4;        //时钟脉冲输入端
//sbit ST = P1^5;                //A/D转换启动信号
//sbit EOC = P1^6;        //A/D转换结束信号
//sbit OE = P1^7;                //数据输出允许信号
//sbit ADD_A = P1^0;        //地址选择输入端
//sbit ADD_B = P1^1;
//sbit ADD_C = P1^2;
//***********************************//
// Function Prototypes
```