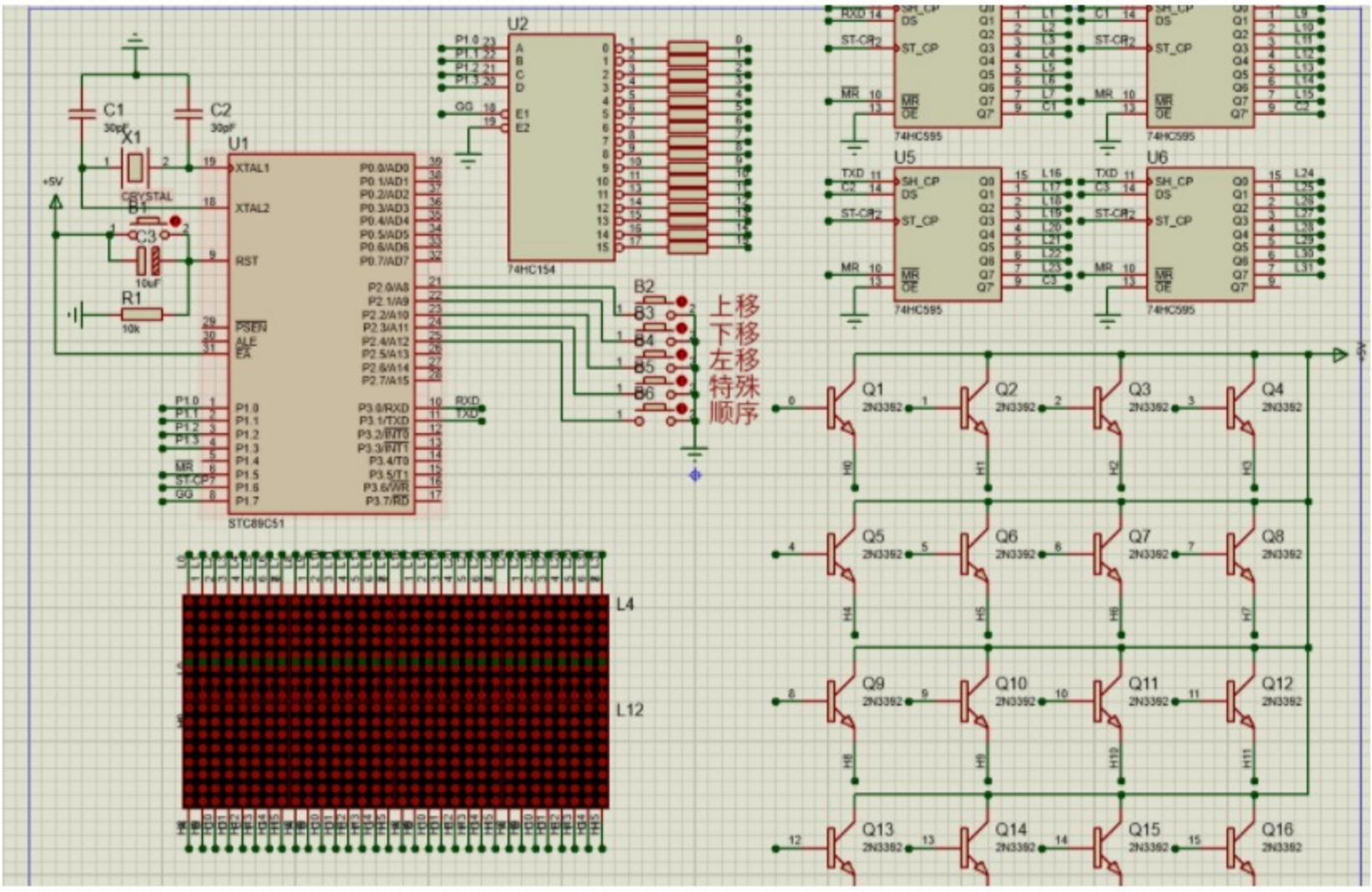


```
0x02,0x04,0xFF,0xFE,0x04,0x20,0x08,0x20,0x06,0x40,0x01,0x80,0x06,0x60,0x38,0x10,
0x22,0x08,0x11,0x08,0x11,0x10,0x00,0x20,0x7F,0xFE,0x40,0x02,0x80,0x04,0x1F,0xE0,
0x00,0x40,0x01,0x84,0xFF,0xFE,0x01,0x00,0x01,0x00,0x01,0x00,0x05,0x00,0x02,0x00,
0x01,0x00,0x01,0x00,0x02,0x80,0x04,0x40,0x08,0x20,0x10,0x10,0x2F,0xEE,0xC0,0x04,
0x00,0x10,0x3F,0xF8,0x02,0x00,0x02,0x00,0x04,0x40,0x08,0x20,0x1F,0xF0,0x00,0x10,
0x20,0x00,0x20,0x00,0x22,0x04,0x3F,0x7E,0x28,0x44,0x48,0x44,0x88,0x44,0x09,0x44,
0xFF,0xC4,0x08,0x44,0x08,0x44,0x14,0x44,0x12,0x44,0x22,0x7C,0x40,0x44,0x80,0x00,
0x00,0x10,0x1F,0xF8,0x10,0x10,0x10,0x10,0x10,0x10,0x10,0x10,0x1F,0xF0,0x11,0x10,
0x01,0x00,0x11,0x10,0x11,0xF8,0x11,0x00,0x11,0x00,0x29,0x06,0x47,0xFC,0x80,0x00,
0x01,0x00,0x11,0x10,0x09,0x20,0x7F,0xFE,0x40,0x02,0x8F,0xE4,0x08,0x20,0x0F,0xE0,
0x01,0x10,0x1F,0xF8,0x11,0x10,0x11,0x10,0x11,0x10,0x11,0x50,0x01,0x20,0x01,0x00,
0x00,0x20,0x00,0xF0,0x1F,0x00,0x10,0x00,0x11,0x00,0x11,0x00,0x21,0x04,0x7F,0xFE,
0x01,0x00,0x01,0x00,0x09,0x20,0x09,0x10,0x11,0x08,0x21,0x0C,0x45,0x04,0x02,0x00,
};


/*************延时1ms**************/
void delay(unsigned int dt)
{
    register unsigned char bt;
    for(;dt;dt--)
    for(bt=0;bt<250;bt++);
}


/**********按键去抖********/
void delay20ms(void)
{
    unsigned char i,j;
    for(i=0;i<100;i++)
    for(j=0;j<60;j++);
}


/***********上移****************/
void fun1()
{
    register unsigned char i,j,k,q;
    for(i=0;i<32;i++)
    {
        for(q=0;q<BLKN/2;q++)
        {
            dispram[i+q*32]=0x00;
```