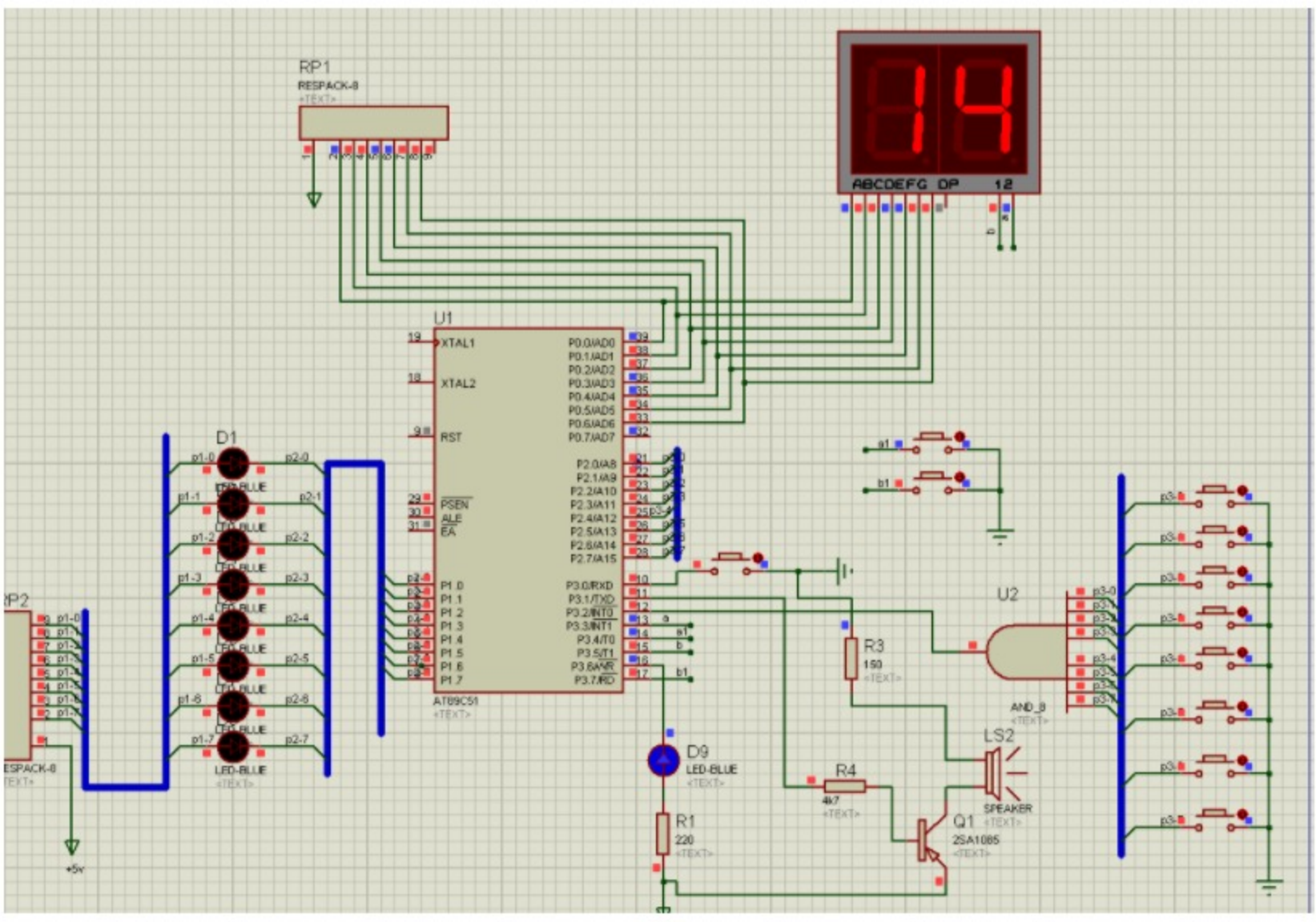

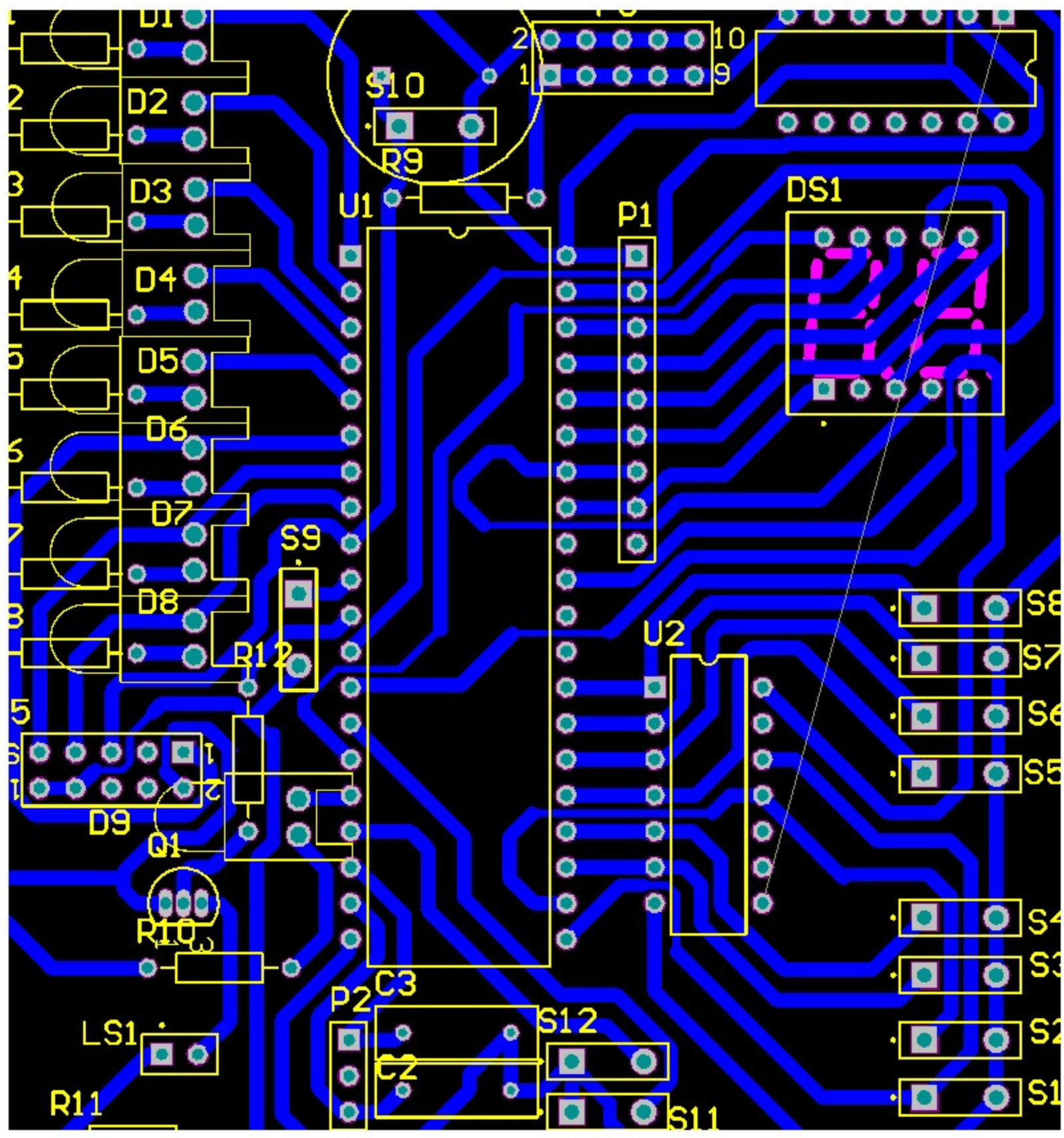

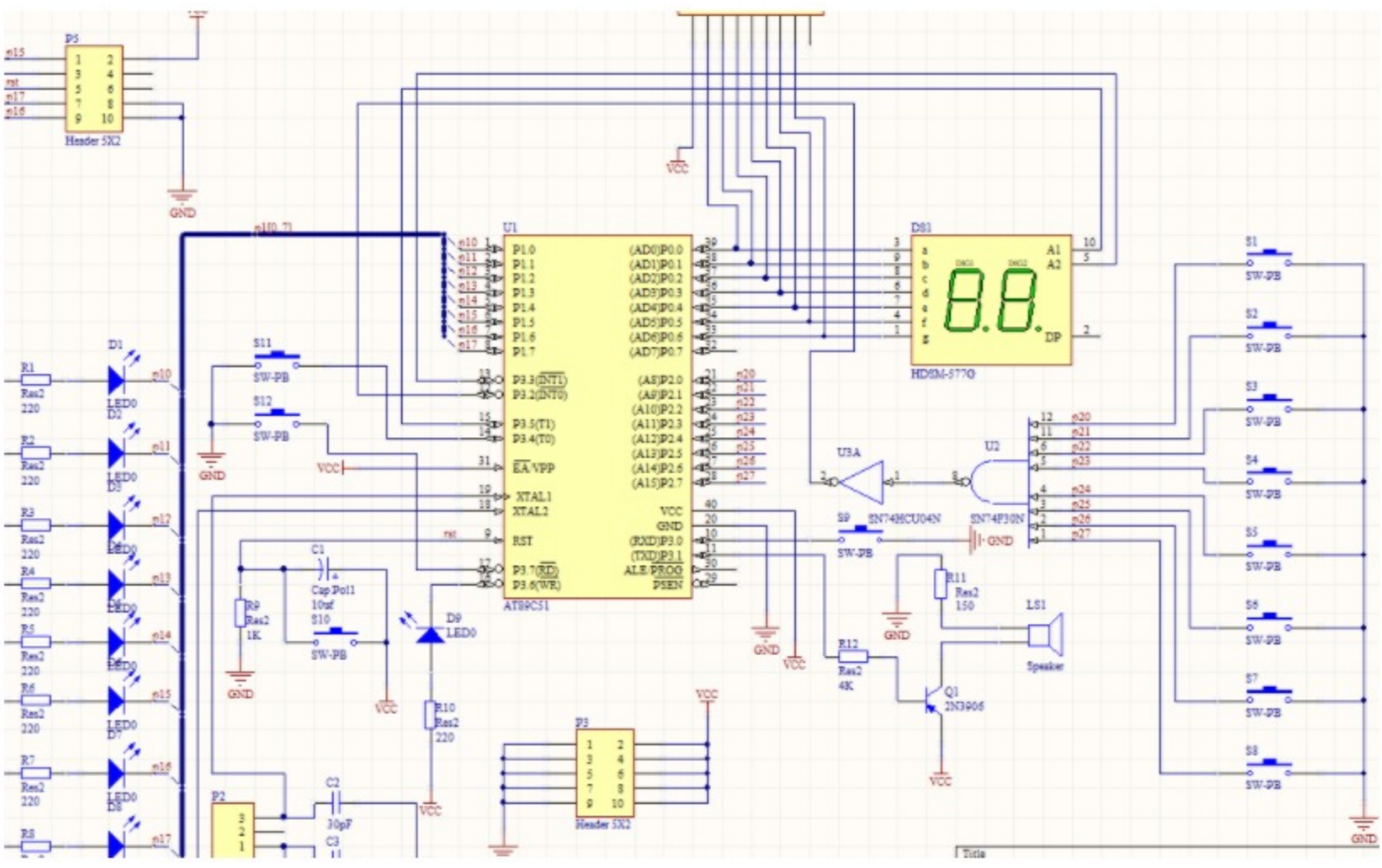


```
#include<reg51.h>
#define uint unsigned int
#define uchar unsigned char
uchar code seg7code[]={0x3f,0x06,0x5b,0x4f,0x66,0x6d,0x7d,0x07,0x7f,0x6f};
sbit button=P3^0;
sbit led=P3^6;
sbit shiwei=P3^5;
sbit gewei=P3^3;
sbit sw=P3^7;
sbit gw=P3^4;
sbit FM=P3^1;
uint sec;
uint count;
bit flag;
void delay(uint c)
{
unsigned char a,b;
for(;c>0;c--)
for(b=142;b>0;b--)
for(a=2;a>0;a--);
}
void Led(int date)
{
uint g,s;
s=sec/10;
g=sec%10;
gewei=1;shiwei=1;
P0=seg7code[s];
```