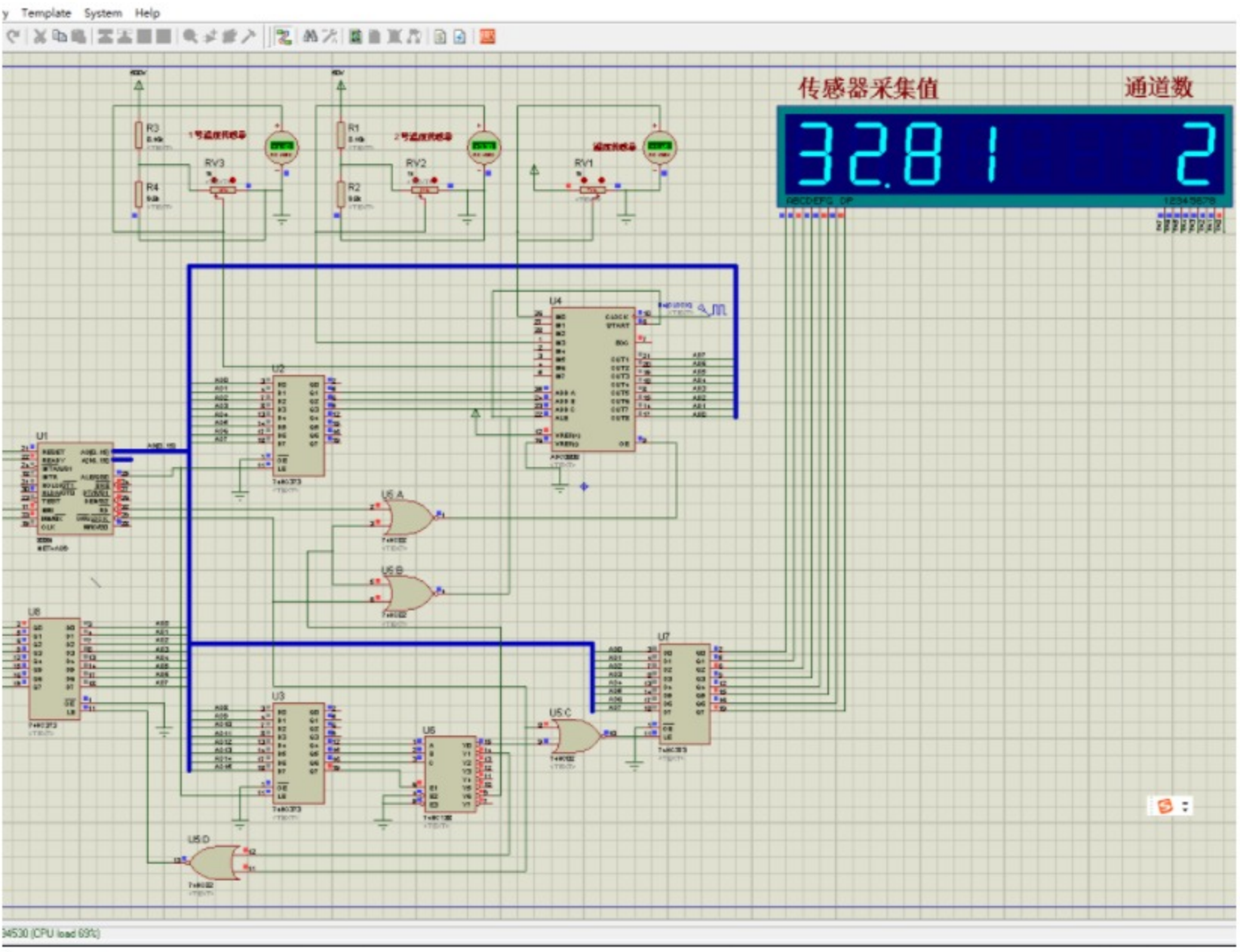


```
CODE SEGMENT
    ASSUME CS:CODE
    AD0809 EQU 0E000H
    AD08091 EQU 0E006H
    AD08092 EQU 0E00CH
    OUT373 EQU 8000H
    OUT3732 EQU 9000H
    TABLEX DB 0C0H,0F9H,0A4H,0B0H,99H,92H,82H,0F8H,80H,90H
    TABLE DB 0FFH,0FFH,0FFH,0FFH,0FFH,0FFH,0FFH,0F9H  ;最右1
    TABLE1 DB 0FFH,0FFH,0FFH,0FFH,0FFH,0FFH,0FFH,0A4H ;最右2
    TABLE2 DB 0FFH,0FFH,0FFH,0FFH,0FFH,0FFH,0FFH,0B0H ;最右3

START:
    MOV DX,AD0809
    MOV AL,00H
    OUT DX,AL
    NOP
    ;MOV CX,0FFH
    ;LOOP $
    MOV CX,0FFH
    LOOP $
    IN AL,DX            ;读取转换结果

    MOV BL,05H          ;输入量程0~5，先对AL扩大5倍
    MUL BL
    MOV SI,OFFSET TABLEX
    CMP AH,0H
```