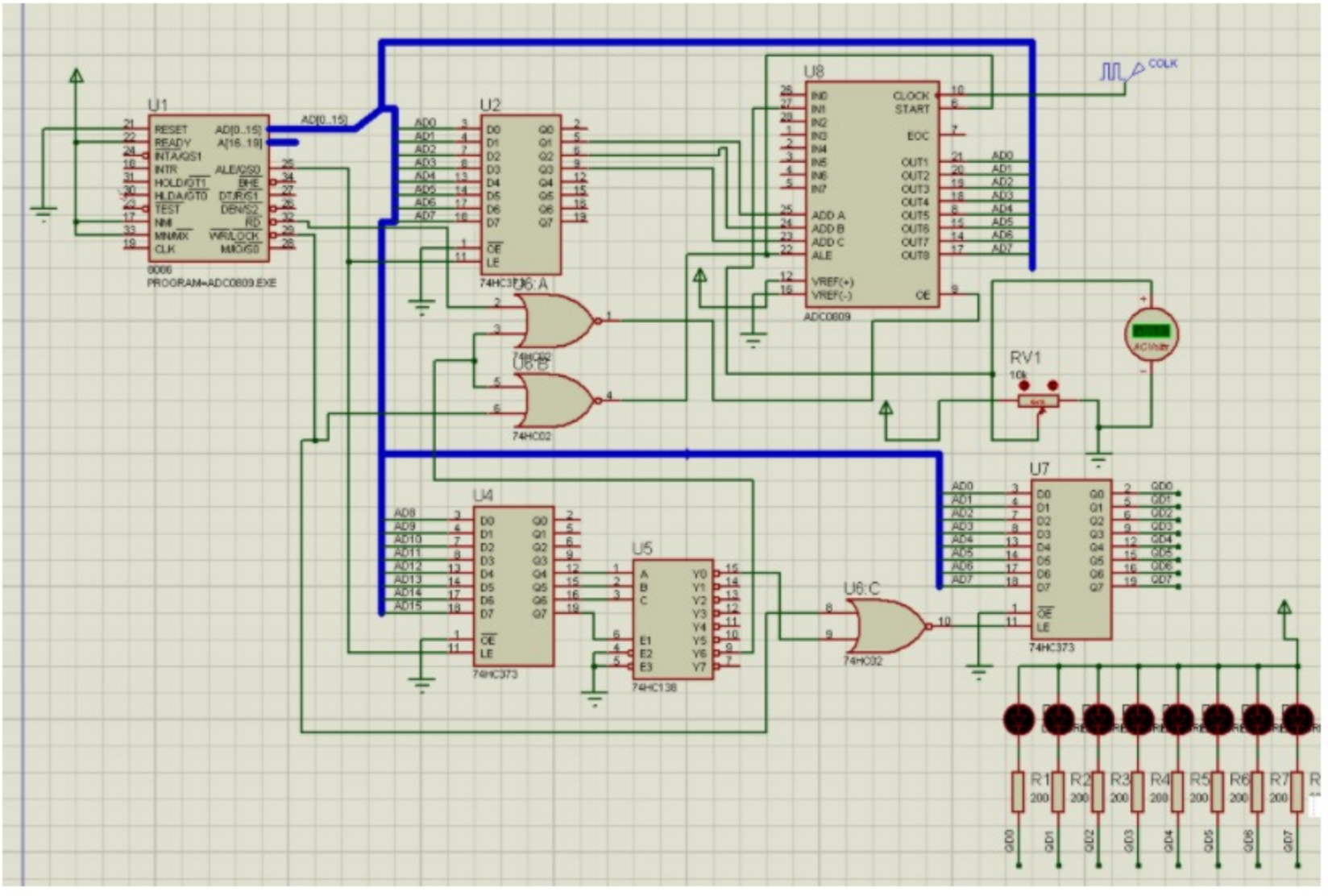

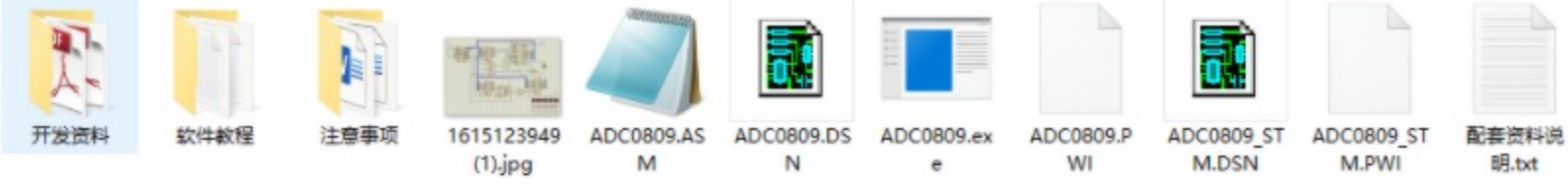
```
CODE    SEGMENT
        ASSUME CS:CODE

AD0809  EQU 0E002H
OUT373  EQU 8000H

START:  MOV AL,00H
        MOV DX,AD0809
        OUT DX,AL

    NOP

```