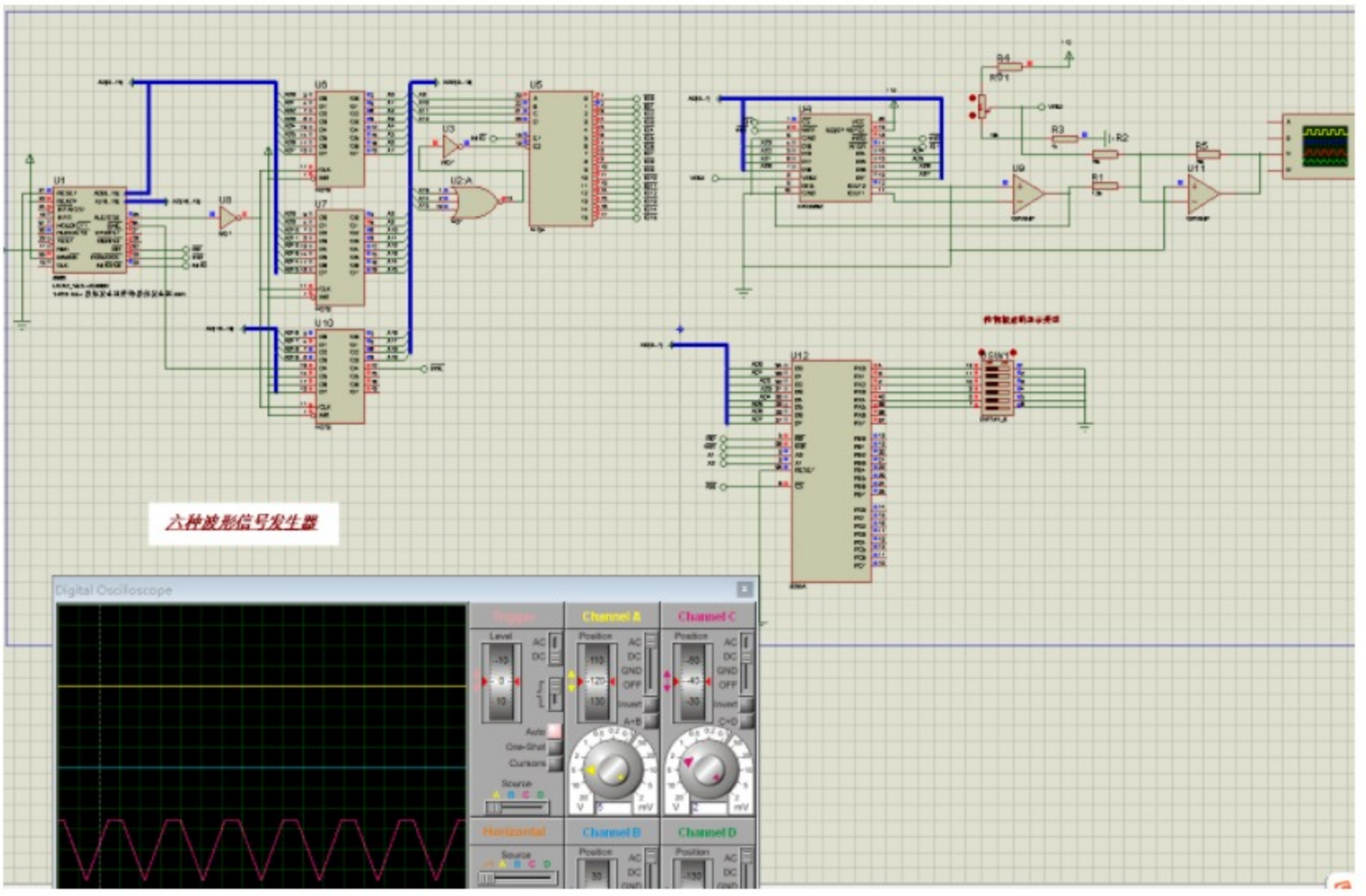


```
mov dx,0006h
mov al,10010000b
out dx,al
in ax,0000H

cmp al,11111111b  ;默认波形，梯形波
jz  trapezoidalwave
cmp al,11111110b     ;阶梯波
jz stepwave
cmp al,11111101b      ;锯齿波
jz sawtoothwave
cmp al,11111011b      ;三角波
jz triangularwave
cmp  al,11110111b     ;梯形波
jz trapezoidalwave
cmp al,11101111b      ;方波
jz squarewave
cmp al,11011111b      ;正弦波
jz sinewave
jmp start

```