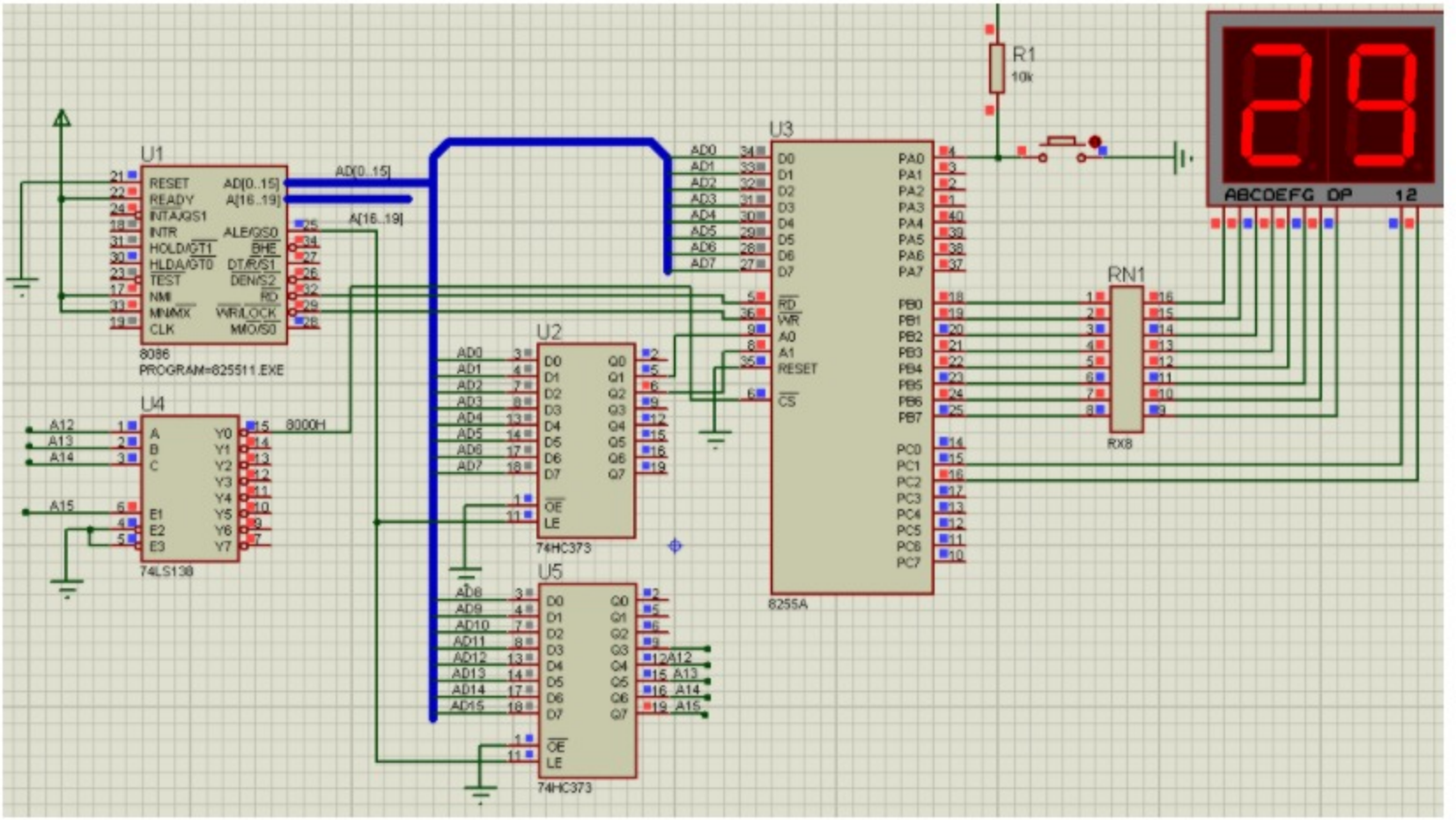


```
CODE    SEGMENT ;
        ASSUME CS:CODE
IOCON   EQU 8006H
IOA     EQU 8000H
IOB     EQU 8002H
IOC     EQU 8004H

START:
    MOV AL,90H
        MOV DX,IOCON
        OUT DX,AL
        NOP
START1: NOP
        NOP
        MOV AL,0
        MOV DX,IOA
```