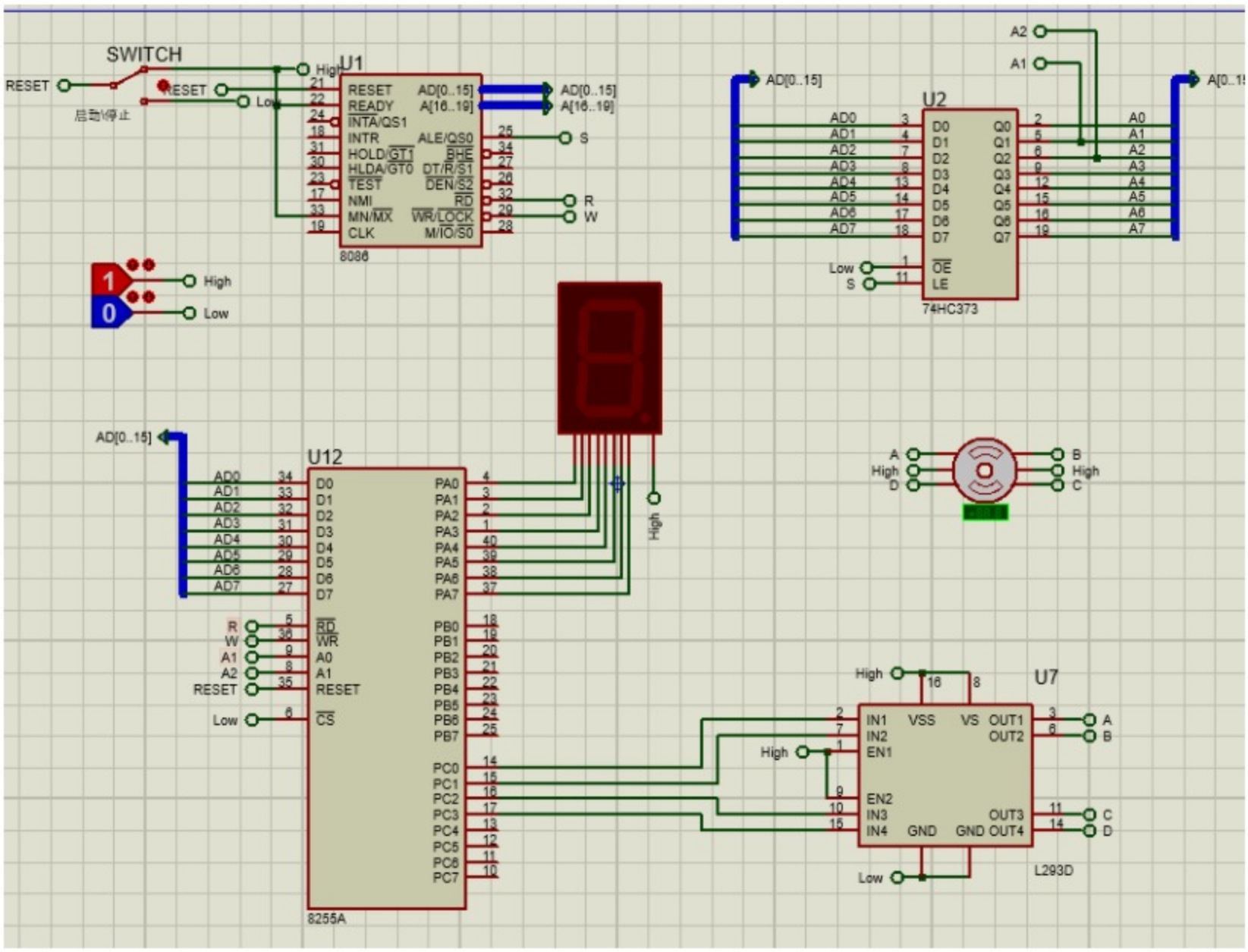

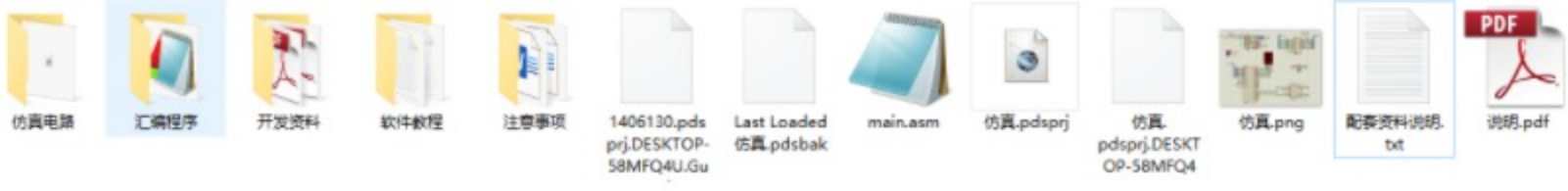
```
    LOOP LM1
    INC DI
    CMP DI, 8
    JL LM0
    JMP START ; repeating from the beginning
ORG 1000H
S1 DB 11000000B ; Common Anode Display; D-g-f-e-d-c-b-a
    DB 11111001B
    DB 10100100B
    DB 10110000B
    DB 10011001B
    DB 10010010B
    DB 10000010B
    DB 11011000B
    DB 10000000B
    DB 10010000B
    DB 10001000B
    DB 10000011B
    DB 11000110B
    DB 10100001B
    DB 10000110B
    DB 10001110B
S2 DB 1101B ; D-C-B-A ; only one phase (B) is de-energized
    DB 1011B ; only phase C is de-energized ; 90°
    DB 0111B ; only phase D is de-energized ; 90°
    DB 1110B ; only phase A is energized ; 90°
S3 DB 1100B ; A & B de-energized ; 45°
    DB 1101B ; B de-energized ; 45°
    DB 1001B ; B & C de-energized ; 45°
    DB 1011B ; C de-energized ; 45°
    DB 0011B ; C & D de-energized ; 45°
    DB 0111B ; D de-energized ; 45°
```