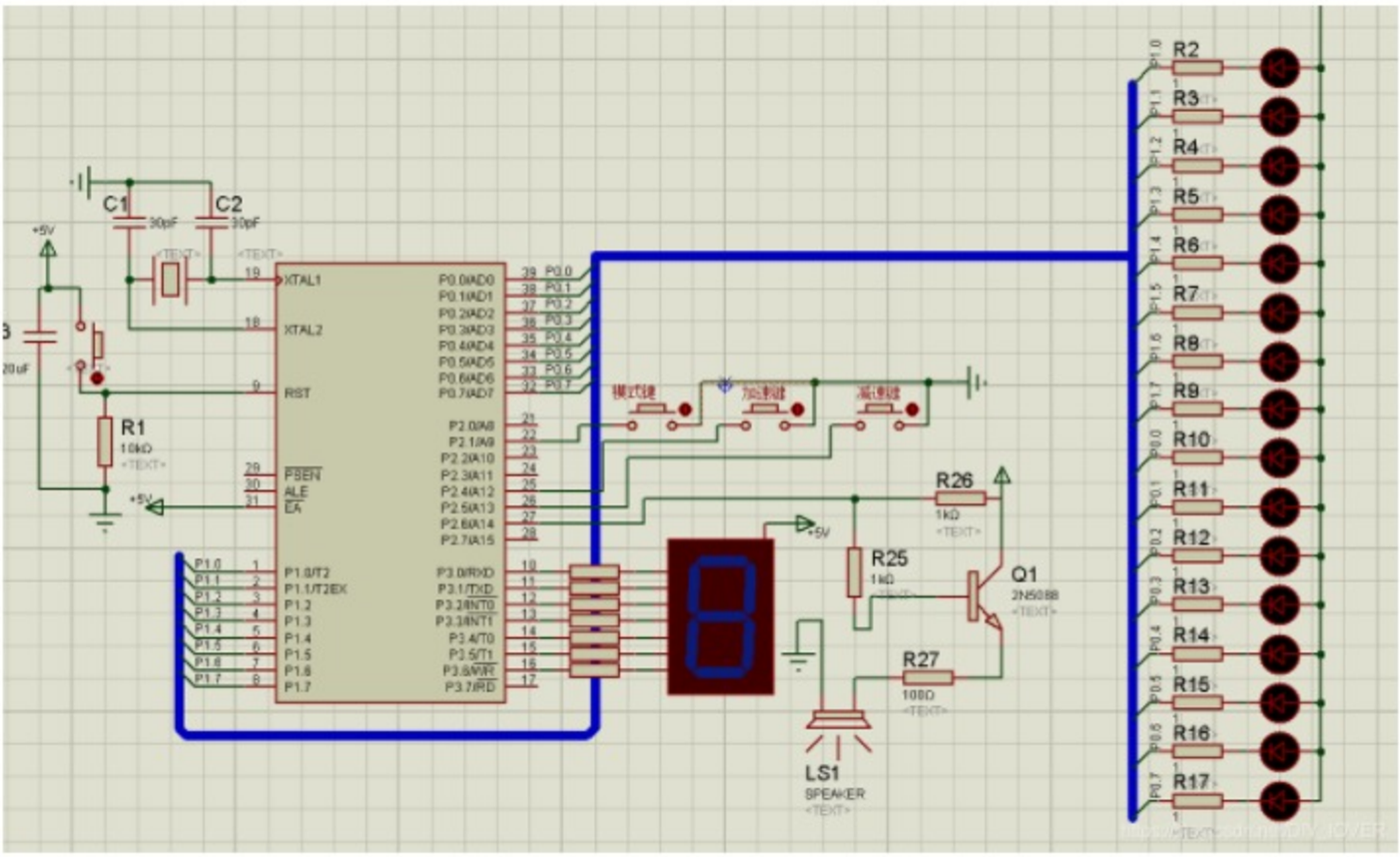


```c
#include <REG52.H>
#include <sound.h>

unsigned char RunMode;

//**********************************System Fuction**********************************
void Delay1ms(unsigned int count)
{
    unsigned int i,j;
    for(i=0;i<count;i++)
    for(j=0;j<1200;j++);
}

unsigned char code LEDDisplayCode[] = { 0xC0,0xF9,0xA4,0xB0,0x99,0x92,0x82,
                                        0xF8,0x80,0x90};

void Display(unsigned char Value)
{
    P3 = LEDDisplayCode[Value];
}

void LEDFlash(unsigned char Count)
{
    unsigned char i;
    bit Flag;
    for(i = 0; i<Count;i++)
    {
```

- 程序（核心文件）
- 仿真（核心文件）
- 开发资料
- 软件教程
- 注意事项
- 彩色原理图.pdf
- 黑白原理图.pdf
- 元器件清单.CSV